REV.	DESCRIPTION	DATE
A	NEW DRAWING	12/21/2005

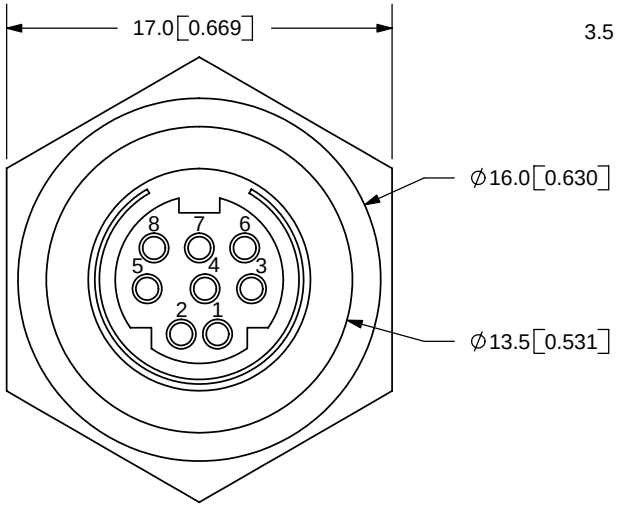

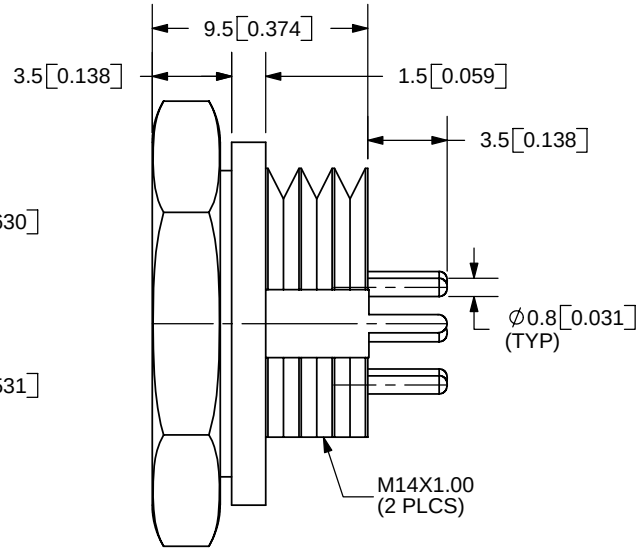

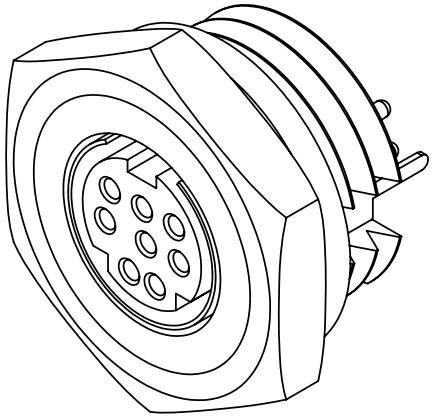

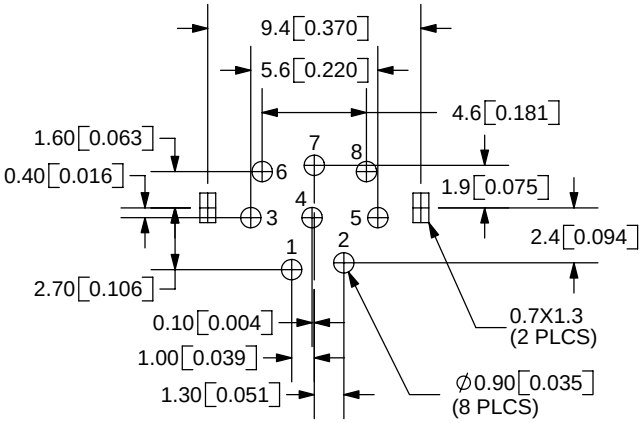

PCB LAYOUT
BACK VIEW

TOLERANCE:
±0.2mm

SPECIFICATIONS:
RATING: 12V DC @ 2A; 100V AC @ 1A
INSULATION RESISTANCE: 50M OHMS MIN: 250V DC
VOLTAGE WITHSTAND: 250V AC R.M.S. FOR 1 MINUTE
CONTACT RESISTANCE: 30m OHMS MAX
INSERTION FORCE: 4.5KG MAX
WITHDRAWAL FORCE: 0.8KG~3KG
LIFE: 5,000 CYCLES

	MATERIAL	PLATING
TERMINALS (1-8)	Phosphor Bronze	Silver
EARTH TERMINAL	Brass	Tin
HOUSING	PBT	

CUI INC
20050 SW 112th Ave.
Tualatin, OR 97062
Phone: 503-643-4899
800-275-4899
Fax: 503-372-1266
Website: www.cui.com

TITLE: MINI CIRCULAR CON.-VERTICAL MOUNT		REV: A
PART NO. MD-80CV		UNITS: MM [INCHES]
DRAWN BY: ZRJ	APPROVED BY:	SCALE: 3:1

PC FILE NAME: MD-80CV

COPYRIGHT 2006 BY CUI INC.