HRS MXR Series

MXR Type Connectors
Miniature Push-Pull Connectors with Ground Function

GENERAL

MXR type connectors are miniature, lightweight, push-pull lock connectors with a ground function which has been developed for use with VTR camera and system camera interfaces.

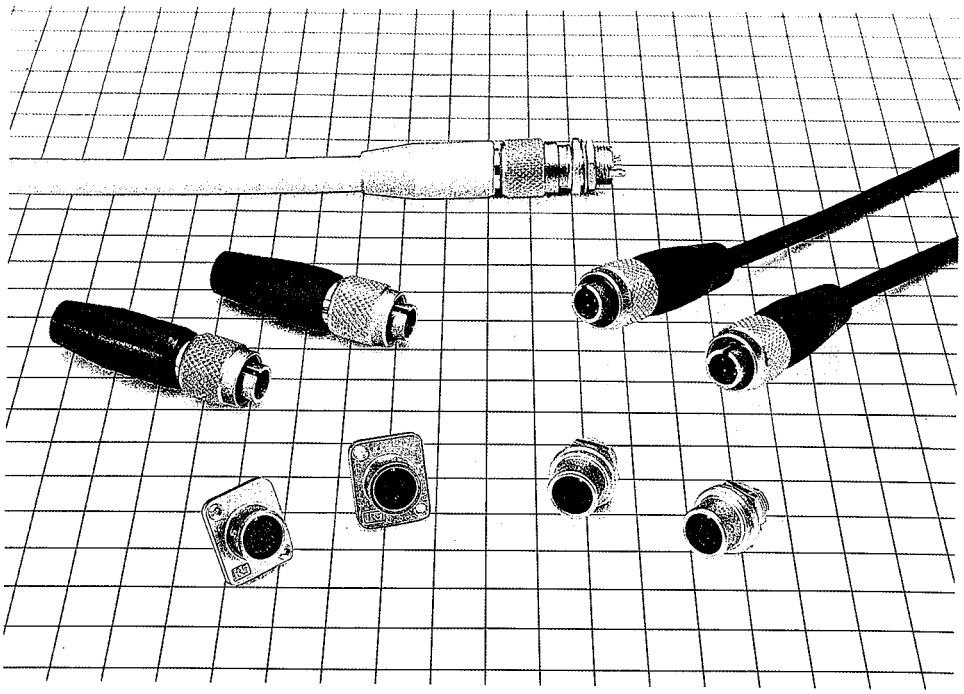

FEATURES

(1) The single action push-pull lock function allows quick connections and disconnections as well as high density mounting.
(2) Verification of a secure engagement is afforded by a click sound which exemplifies the fine feel of this lock system.
(3) Use of aluminum alloy for the shell has contributed to the lightweight design.
(4) The metal portion of the shell forms part of the contacting structure as a measure toward FCC radiation requirements.
(5) One of the conductors makes contact before the others in this sequenced design.
(6) A simple tightening of the cable tube around the conductors permits the cable to be clamped, affording an increase in workability and a reduction in special tools.

APPLICATIONS

VTR cameras, system cameras, audio equipment, etc.

■ MATERIALS AND PROCESSING

Part Name	Material	Processing
Shell	Aluminum alloy	Nickel plating
Insulation	PBT resin*	(Black)
Male pins	Brass	Gold plating
Female pins	Phosphor bronze	Partial gold plating

*UL94V-0

■ STRUCTURE OF THE PRODUCT NUMBER

MXR — 8 P A — 3 P B (01)

(1) Model
(2) Shell size
(3) Shell classification
(4) Shell modification
(5) Pin arrangement
(6) Pin form
(7) Pin modification
(8) Special specifications

(1) Model : Indicates the MXR Series
(2) Shell size : Indicates the shell outer diameter at the plug engagement portion
(3) Shell classification : Classified as follows
P: Plug
R: Receptacle
(4) Shell modification : Each time there is a modification of form related to the shell, the indicator changes in the sequence of A, B, D, E, etc.
(5) Pin arrangement : Indicated by the number of pins: 3 or 8.
(6) Pin form : Classified as follows
P: Male contacts
S: Female contacts
(7) Pin modification : Each time a modification is made to the pin form, the indicator changes in the sequence of A, B, D, E, etc.
(8) Special specifications : Each time there is a change in specifications other than the aforementioned, the indicator changes in the sequence of (01), (02), (03), etc.

Plug

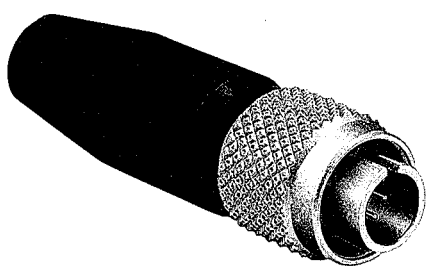

MXR-8P-8P

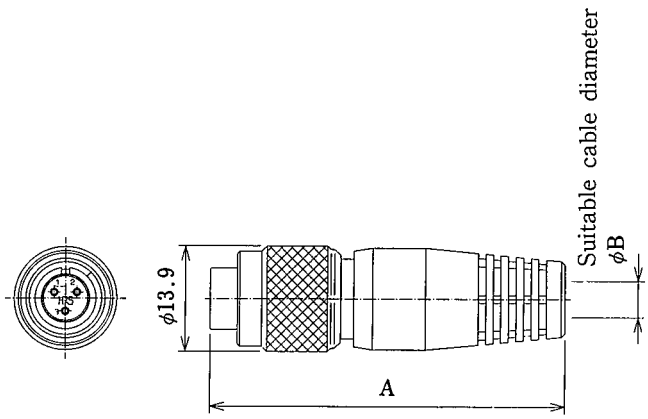

(An example in shape)

HRS No.	Part No.	A	φB	Weight	Bussing	Remarks
127-0003-6	MXR-8PA-3PB	47	5	8g	Black	Sequenced construction
127-0004-9	MXR-8PA-4PB	47	5	8g	Black	Sequenced construction
127-0005-1	MXR-8PA-6PB	47	5	8g	Black	Sequenced construction
127-0002-3	MXR-8P-8P	50	8	9g	Black	—
127-0002-3-01	MXR-8P-8P(01)	50	8	9g	White	—

Receptacle (to be tightened with nut)

(To be soldered)

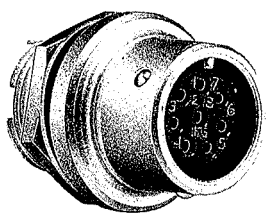

MXR-8RA-8S

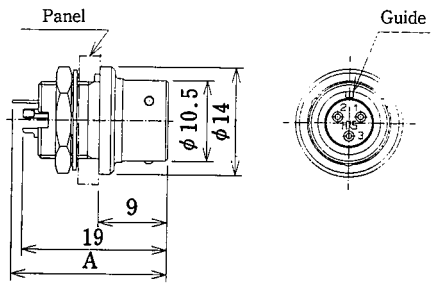

(An example in shape)

HRS No.	Part No.	Weight	A	Remarks
127-0121-2	MXR-8RA-3S	3.5g	19.3	with gold-plated contacts
127-0122-5	MXR-8RA-4S	3.5g	19.3	with gold-plated contacts
127-0123-8	MXR-8RA-6S	3.5g	19.3	with gold-plated contacts
127-0124-0	MXR-8RA-8S	3.5g	20.4	with gold-plated contacts

Receptacle (Flange type)

(Dip type)

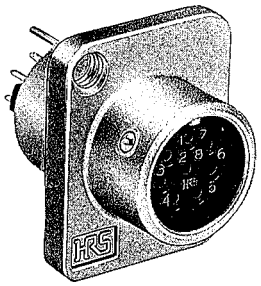

MXR-8R-8SA

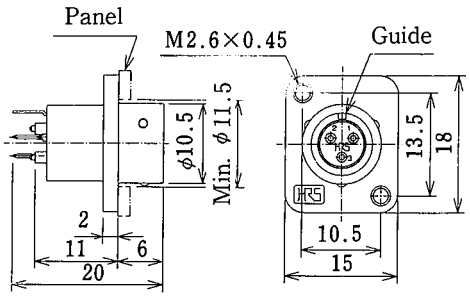

(An example in shape)

HRS No.	Part No.	Weight	Remarks
127-0101-5	MXR-8R-3SA	3.5g	with gold-plated contacts
127-0103-0	MXR-8R-4SA	3.5g	with gold-plated contacts
127-0104-3	MXR-8R-6SA	3.5g	with gold-plated contacts
127-0102-8	MXR-8R-8SA	3.5g	with gold-plated contacts

Dip Post Arrangement Dimensions

3 cores

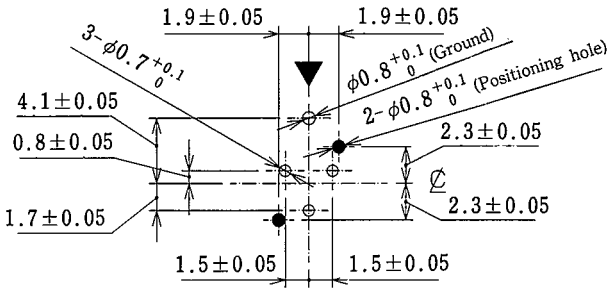

4 cores

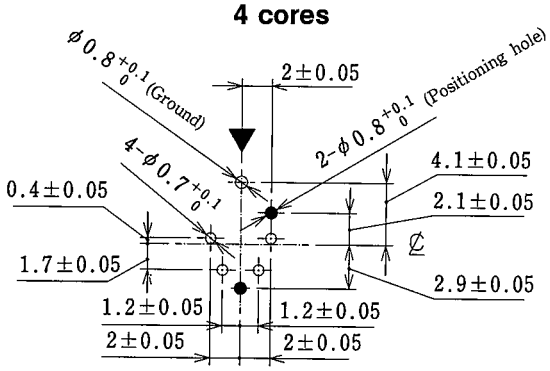

6 cores

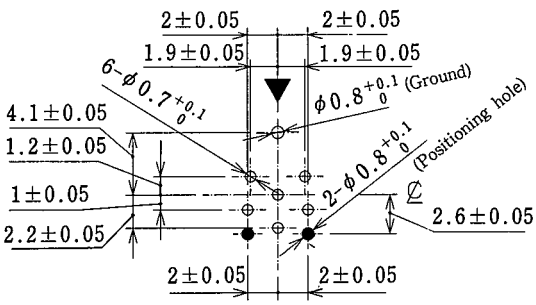

8 cores

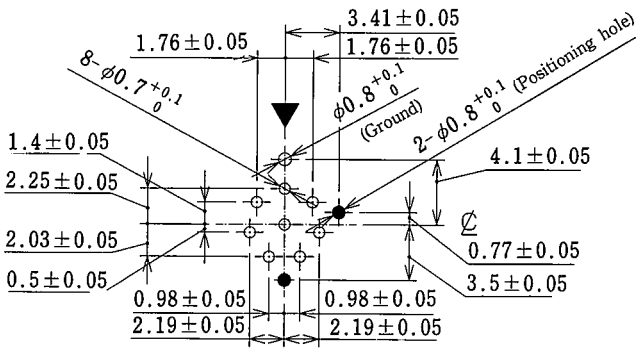

Remarks : The above figures are as viewed from the mating side (wiring side of the plug) of the receptacle.
Marks ▼ show the position of the guide.

◆ Outline of the Wiring Work

• MXR-8PA-3PB

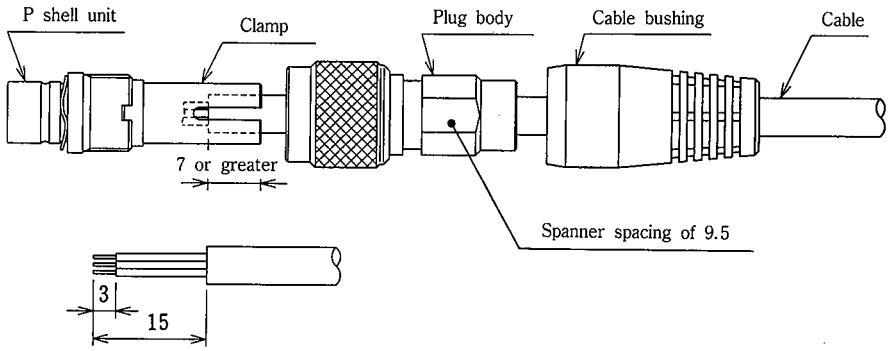

Work Procedure

1. Pass the cable bushing, plug body, and clamp over the cable in order and perform the end processing.
2. Solder the wires to the P shell unit.
3. Align the protruding portion of the clamp with the recessed portion of the P shell unit and mount.
4. Align the plug and cable sheath strip position, then tighten the plug body to the screw portion of the P shell unit with a torque of 1 N·m.
   Note that to prevent loosening, an application of Locktight 271 manufactured by Nihon Locktight K.K. is recommended.
5. Put the cable bushing over the clamp body to complete the job.

• MXR-8P-8P

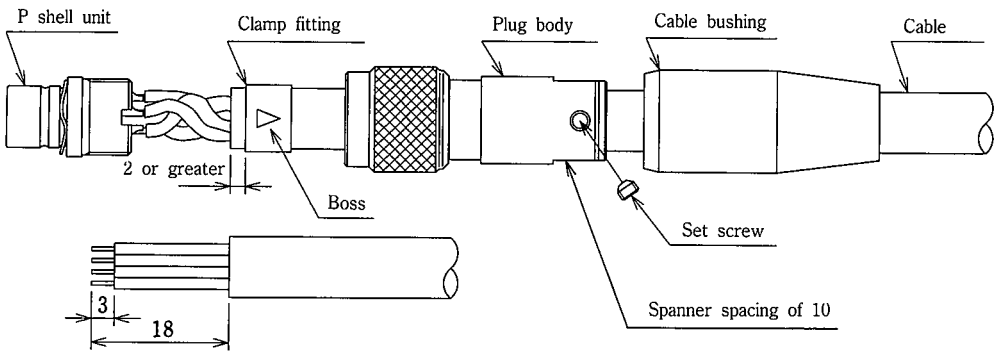

Work Procedure

1. Pass the cable bushing and plug body over the cable in order and perform the end processing.
2. Solder the wires to the P shell unit.
3. Fasten the clamp fitting to the cable with the cable crimping tool (HR10A-TC-04).
4. Tighten the clamp body to the screw portion of the P shell unit with a torque of 1 N·m.
   Note that to prevent loosening, an application of Locktight 271 manufactured by Nihon Locktight K.K. is recommended.
5. Tighten the set screw so that the tip falls into one of the two bosses of the clamp fitting.
   Note that a tightening torque of 0.3 N·m is specified.
6. Put the cable bushing over the clamp body to complete the job.

Scale drawing of receptacle mounting holes

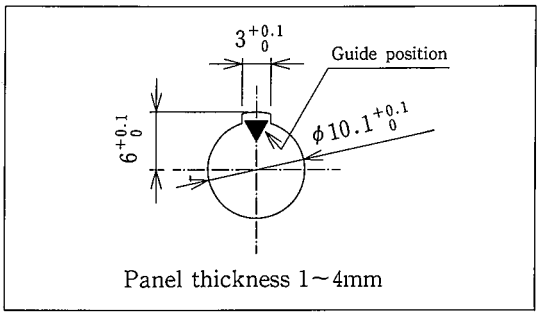

(Jam Nut Type)

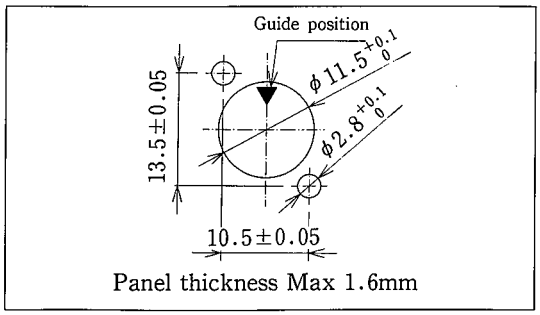

(Flange Type)

NOTES:

1. The diagram shows the view from the engagement side (i.e., plug wiring side) of the receptacle. Also note that the ▼ symbol indicates the guide position.

Applicable Tools

Type	HRS No.	Part No.	Applicable Connectors
Tightening jig	150-0092-3	MXR-8P-T01	All plug products
Cable crimping tool	150-0058-5	HR10A-TC-04	MXR-8P-8P
Hexagonal wrench driver	150-0066-3	PB205/1.27	MXR-8P-8P

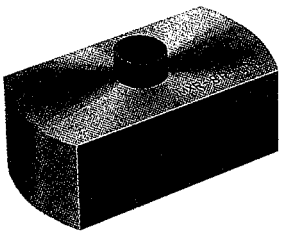

MXR-8P-T01

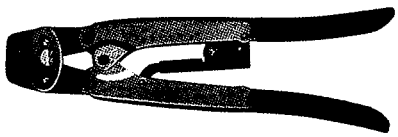

HR10A-TC-04

PB205/1.27

Pin Arrangement and Major Ratings

Number of poles	3	4	6	8
Pin arrangement	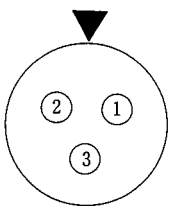	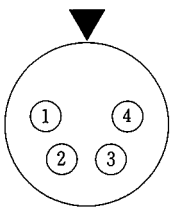	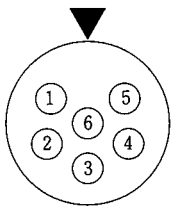	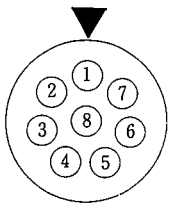
Withstand voltage	300 V AC for 1 minute			
Current capacity	2 A			
Insulation resistance	1000 MΩ or greater at 100 V DC			
Contact resistance	20 mΩ or less at 1A DC			
Solder pot diameter	0.9 mm dia.			

NOTES:

1. The diagram shows the view from the engagement side (i.e., plug wiring side) of the receptacle. Also note that the ▼ symbol indicates the guide position.
2. The withstand voltage value indicates the test voltage.
   The connector should normally be used at less than 50 V AC or 70 V DC.