DESCRIPTION: HIGH DENSITY RIGHT ANGLE WITH FERRITE

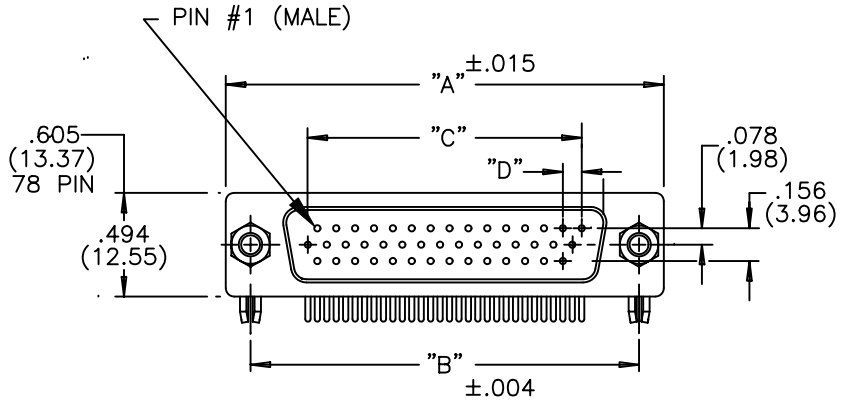

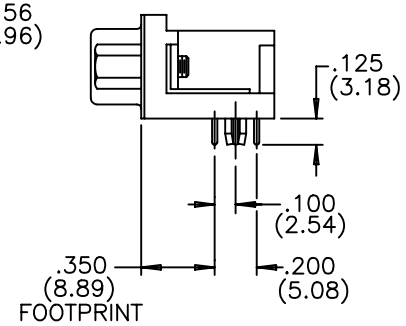

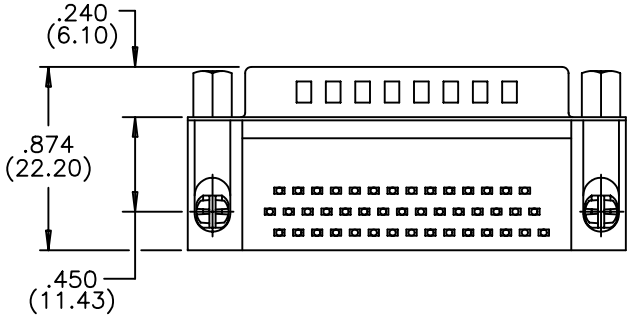

MATERIALS:

INSULATOR: PBT, UL94V–O, 230°C PROCESS TEMP
CHEMICAL RESISTANCE, COLOR BLACK

SHELL: STEEL, NICKEL PLATED

CONTACT: MALE:BRASS; FEMALE:PHOSPHOR BRONZE
GOLD FLASH IN MATING AREA
TIN PLATING ON TAIL ENDS

RoHS COMPLIANT

ELECTRICAL:

CURRENT RATING: 2 AMPERES
DIELECTRIC WITHSTANDING VOLTAGE: 1000VAC rms AT SEA LEVEL
INSULATION RESISTANCE: 5000 MEGOHMS MIN.
CONTACT RESISTANCE: 10 MILLIOHMS MAX.
WORKING TEMPERATURE: –55° TO +125° C
FERRITE SPECS: ATTENUATION – 25 OHMS MIN @ 30Mhz,
35 OHMS MIN @ 50 Mhz, 50 OHMS @ 100 Mhz.

194–XXX–X13LXX1

SERIES
NUMBER OF CONTACTS
GENDER
1 = MALE
2 = FEMALE (NO GROUND INDENTS)
PC MOUNT
3 = NICKEL SHELL
HARDWARE OPTIONS:
17 = 4–40 INSERT WITH INSIDE GROUND STRAP
53 = 4–40 INSERT WITH BOARD LOCKS
56 = 4–40 STANDOFFS WITH BOARD LOCKS
PLATING:
1 = GOLD FLASH

NUMBER OF CONTACTS	"A" Inch (mm)	"B" Inch (mm)	"C" Inch (mm)	"D" Inch (mm)
15	1.214 (30.84)	.984 (24.99)	.405 (10.29)	.090 (2.29)
26	1.545 (39.24)	1.312 (33.32)	.765 (19.43)	.090 (2.29)
44	2.088 (53.04)	1.852 (47.04)	1.305 (33.15)	.090 (2.29)
62	2.730 (69.34)	2.500 (63.50)	1.948 (49.47)	.095 (2.41)
78	2.635 (66.93)	2.406 (61.11)	1.805 (45.85)	.095 (2.41)

THESE DRAWINGS AND SPECIFICATIONS ARE THE PROPERTY OF NorComp AND SHALL NOT BE REPRODUCED, COPIED OR USED AS THE BASIS FOR THE MANUFACTURE OF SALE OF APPARATUS WITHOUT WRITTEN PERMISSION.

DRAWN: PAM JENKINS
DATE: 9–15–05
CHECKED:
DATE:
SCALE:
SHEET 1 OF 1
REV 1
DWG NO. 194–XXX–113LXX1

NorComp

DESCRIPTION: HIGH DENSITY RIGHT ANGLE MALE FOOTPRINT

78 POSITION MALE

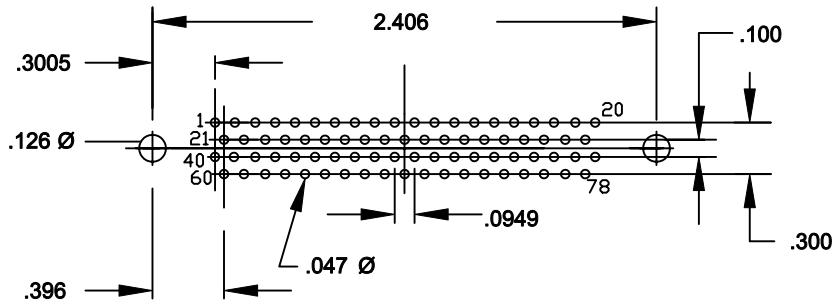

26 POSITION MALE

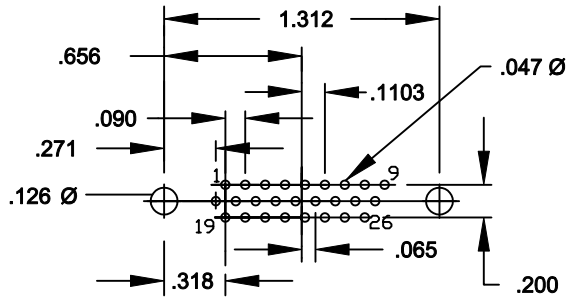

62 POSITION MALE

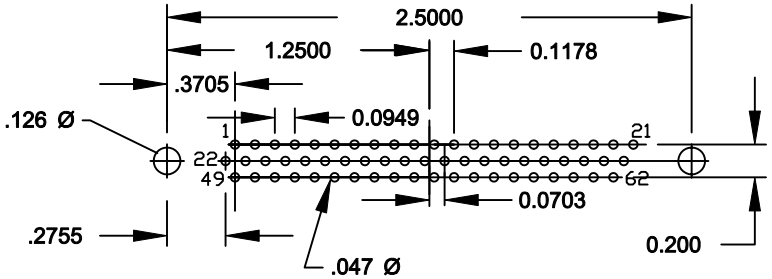

15 POSITION MALE

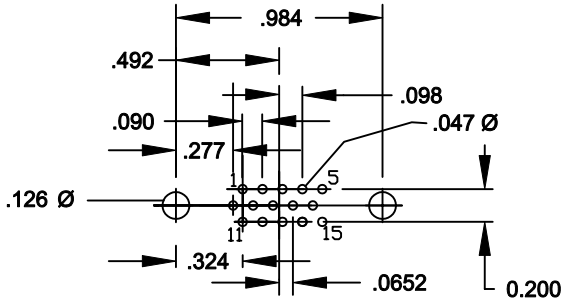

44 POSITION MALE

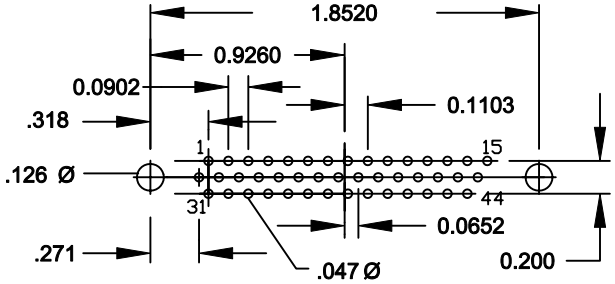

THESE DRAWINGS AND SPECIFICATIONS ARE THE PROPERTY OF NorComp AND SHALL NOT BE REPRODUCED, COPIED OR USED AS THE BASIS FOR THE MANUFACTURE OF SALE OF APPARATUS WITHOUT WRITTEN PERMISSION.

NorComp

DRAWN: PAM JENKINS	DATE: 10-29-01	
CHECKED:	DATE:	
SCALE:	SHEET 1 OF 1	REV 4
DWG NO. HIGH DENSITY RIGHT ANGLE MALE FOOTPRINT		