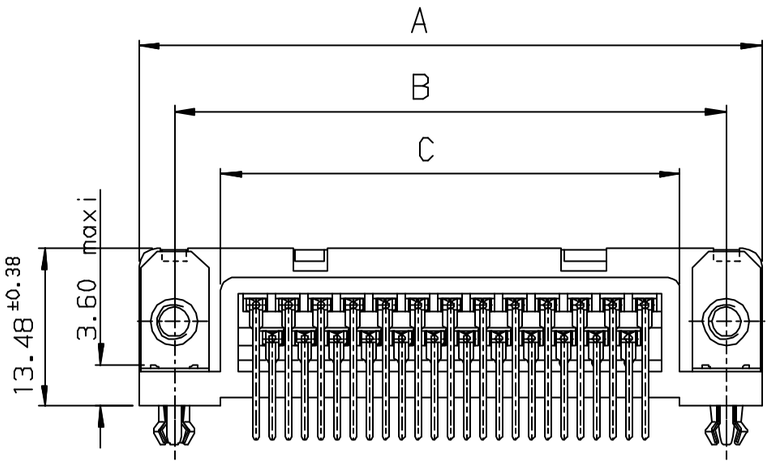

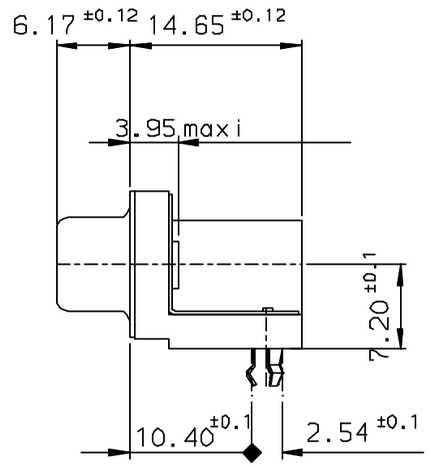

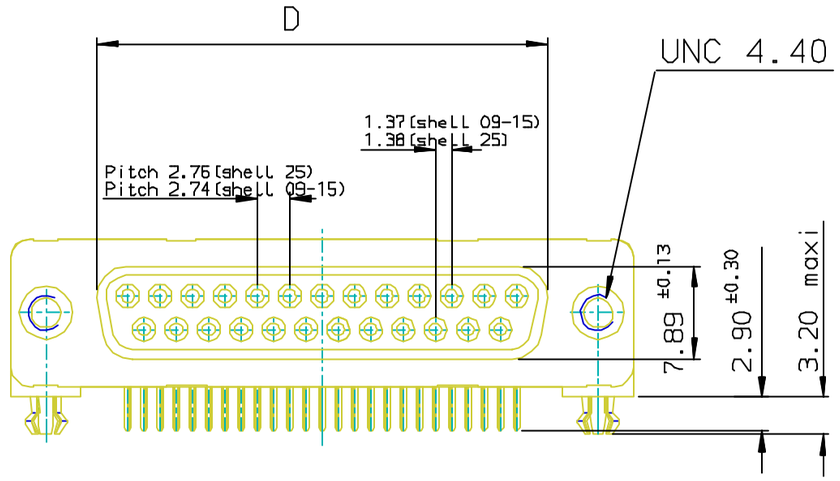

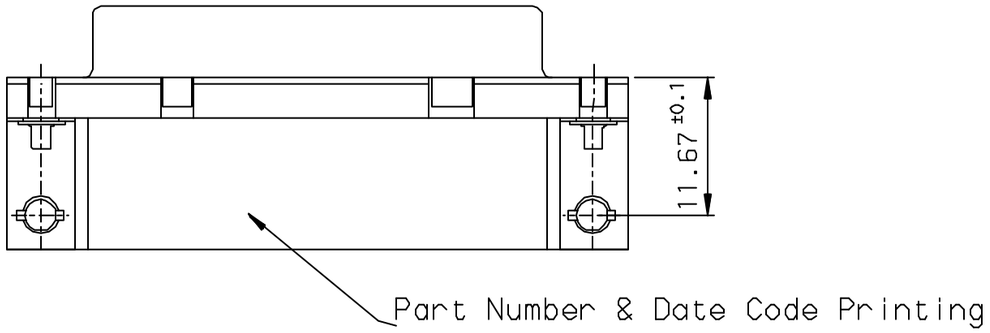

PC card drilling dimensions (after plating)

(thickness 1.60±0.20mm)

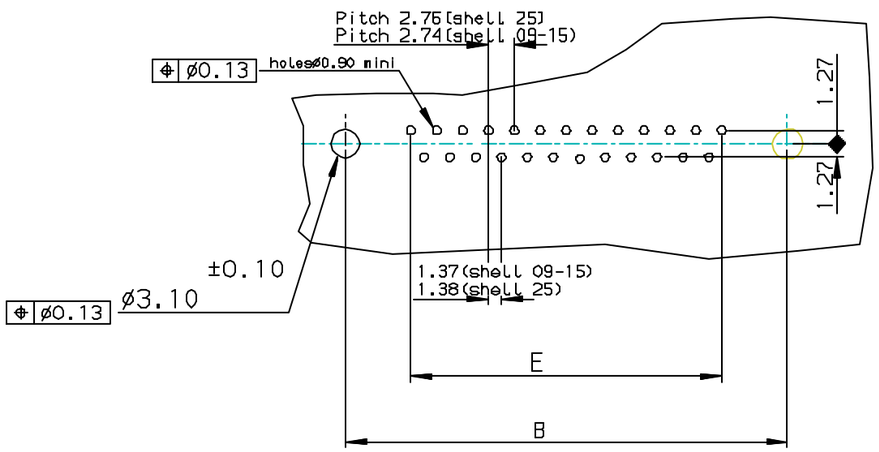

Core range

SHELL	A±0.38	B±0.12	C±0.10	D±0.25	PART NUMBER
09	30.81	24.99	16.96	16.21	D09S13A4GX00**
15	39.14	33.32	25.18	24.54	D15S13A4GX00**
25	53.03	47.04	39.12	38.25	D25S13A4GX00**

GENERAL CHARACTERISTICS : SEE DRAWING C01-8646-0000

LF FOR LEAD FREE

rev	ecn no	dr	date
H	[05-0124	JS	2005/07/27
I	[06-0074	SK	2006/06/08
-	-	-	-
-	-	-	-
-	-	-	-
-	-	-	-
-	-	-	-

European Views

www.fciconnect.com

surface ISO 1302

tolerance std ISO 406 ISO 1101

TOLERANCES UNLESS OTHERWISE SPECIFIED

projection

mm

Dr	JOHN SLEEBA	1994/08/01	ANGULAR	LINEAR	0.X	±0.1	size A3
Eng	GEORGE VJ	1994/08/01			0.XX	±0.1	Scale 1:1
Chr	GEORGE VJ	2005/07/27	0.XX° ±1°		0.XXX	±0.1	ECN -
Appr	KVSD	2005/07/27	Product family			D-SUB	Spec ref -

title: SOCKET CONNECT.DELTA D RIGHT ANGLED WITH NUT, HARPOON & METAL PLATE

dwg no: C01-8646-0294

Rev. I

catalog no: DELTA-D

CUSTOMER

sheet 1 of 1

Copyright FCI.

REV F - 2006-04-17