used for: D-SUB FILTER

POS.	A $^{-0.76}$	B $^{+0.25}$	C	D $^{-0.3}$	Part NO.
9	31.19	16.79	25.00 $^{+0.12}_{-0.13}$	6.12	**241A27120X**
15	39.52	25.12	33.30 $^{+0.15}_{-0.1}$	6.12	**241A27130X**
25	53.42	38.84	47.04 ±0.13	5.99	**241A27140X**
37	69.70	55.30	63.50 ±0.13	5.99	**241A27150X**

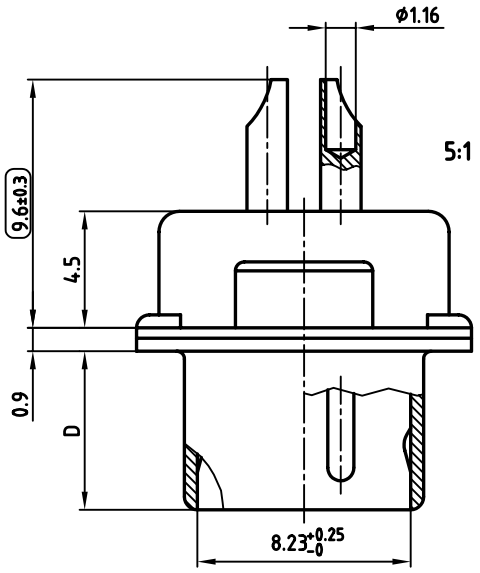

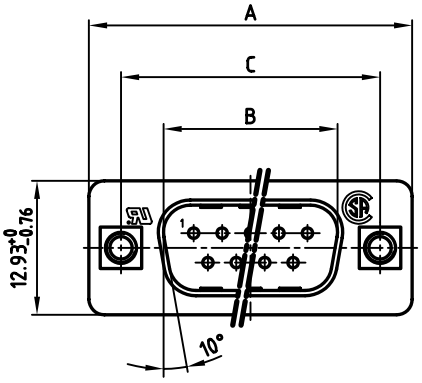

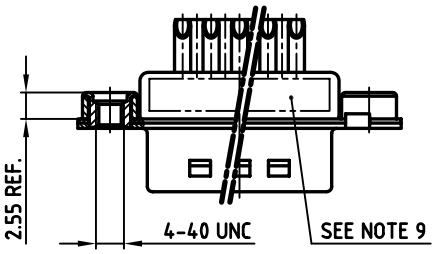

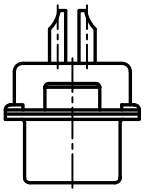

NOTES:

1. METALSHELLS: STEEL; min. 320µ" TIN
2. INSULATORS: HIGH TEMPERATURE PLASTIC UL 94 V-0, BLACK
3. CONTACTS: COPPER ALLOY
   PLATING: 8µ" HARD GOLD OVER min. 50µ" NICKEL
   SOLDER CUP ACCEPTS CABLE AWG 20
4. THREADED INSERT: COPPER ALLOY; min. 200µ" TIN over 80µ" NICKEL
5. COLLAR: COPPER ALLOY; min. 200µ" TIN over 80µ" NICKEL
6. CAPACITANCE: 1300pF ±20%
7. DIELECTRIC WITHSTANDING VOLTAGE: 424 VDC
8. MAXIMUM TORQUE VALUE FOR THREAD: 6" LBS
9. CONNECTOR IS PART MARKED: PART-NO. CONEC ABC
10. ( ) = CHECK DIMENSION

Directive 2002/95/EC „RoHS" Compliant

APPROVAL # FREIGABE # DEBLOCAGE # AUTOR/ZACION # APPROVAL

CUSTOMER APPROVAL DATE:

NAME: TITLE:

COMPANY NAME:

APPROVAL # FREIGABE # DEBLOCAGE # AUTOR/ZACION # APPROVAL

THIS DRAWING MAY NOT BE COPIED OR REPRODUCED IN ANY WAY, AND MAY NOT BE PASSED ON TO A THIRD PARTY WITHOUT WRITTEN PERMISSION. OWNERSHIP AND COPYRIGHT OF CONEC GmbH

DO NOT ALTER CAD DRAWING BY HAND

rev.	description	date	name
a	Origin		

tolerance

dim. in mm

	date	name
2006		
drawn	06.02.	Lehmenkühler
appd.	06.02.	Mickenbecker
norm	DIN 41652	
d-old		

CONEC®

scale: 2:1 (5:1)

material: SEE NOTES

title:

D-SUB FILTER MALE

9-37pos. SOLDER CUP

with threaded insert

dwg no: 24K1A760

AutoCAD 2004 | DIN-A 3 | sh: 1/1

part no: SEE TABLE