used for: D-SUB

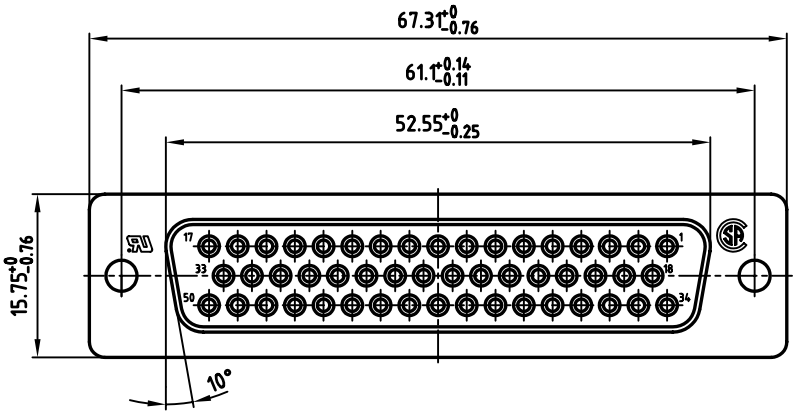

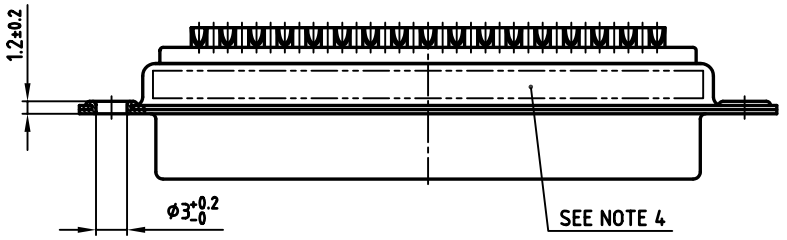

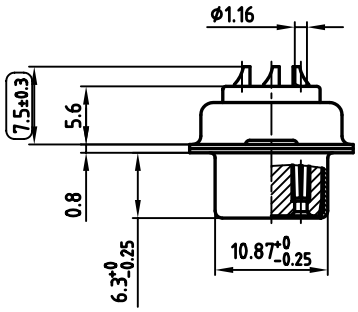

NOTES:

1. METALSHELLS: STEEL; min. 320µ" TIN
2. INSULATORS: PBT GF UL 94 V-0, BLACK
3. CONTACTS: COPPER ALLOY
   PLATING: 8µ" HARD GOLD OVER min. 50µ" NICKEL
   SOLDER CUP ACCEPTS CABLE AWG 20
4. CONNECTOR IS PART MARKED: 164A10059X CONEC ABC
5. ( ) = CHECK DIMENSION

Directive 2002/95/EC „RoHS" Compliant

APPROVAL # FREIGABE # DEBLOCAGE # AUTOR/ZACION # APPROVAL

CUSTOMER APPROVAL DATE:

NAME: TITLE:

COMPANY NAME:

APPROVAL # FREIGABE # DEBLOCAGE # AUTOR/ZACION # APPROVAL

THIS DRAWING MAY NOT BE COPIED OR REPRODUCED IN ANY WAY, AND MAY NOT BE PASSED ON TO A THIRD PARTY WITHOUT WRITTEN PERMISSION. OWNERSHIP AND COPYRIGHT OF CONEC GmbH

DO NOT ALTER CAD DRAWING BY HAND

rev.	description	date	name
a	Origin		

tolerance

dim. in mm

	date	name
2006	date	name
drawn	26.01.	Lehmenkühler
appd.	27.01.	Mickenbecker
norm	DIN 41652	
d-old		

CONEC®

scale: 2:1

material: SEE NOTES

title:

D-SUB FEMALE

50pos. SOLDER CUP

dwg no: 16K1A1721

AutoCAD 2004

DIN-A 3

sh: 1/1

part no: 164A10059X