DRAWING MADE IN THIRD ANGLE PROJECTION

THIS DRAWING IS UNPUBLISHED. RELEASED FOR PUBLICATION ,19 .
© COPYRIGHT 19 BY AMP INCORPORATED. ALL INTERNATIONAL RIGHTS RESERVED.

LOC	DIST	P	F	REVISIONS				
				ZONE	LTR	DESCRIPTION	DATE	APPD
GP	00				J	REV PER EC 0U1D-0275-00	03JAN02	JR

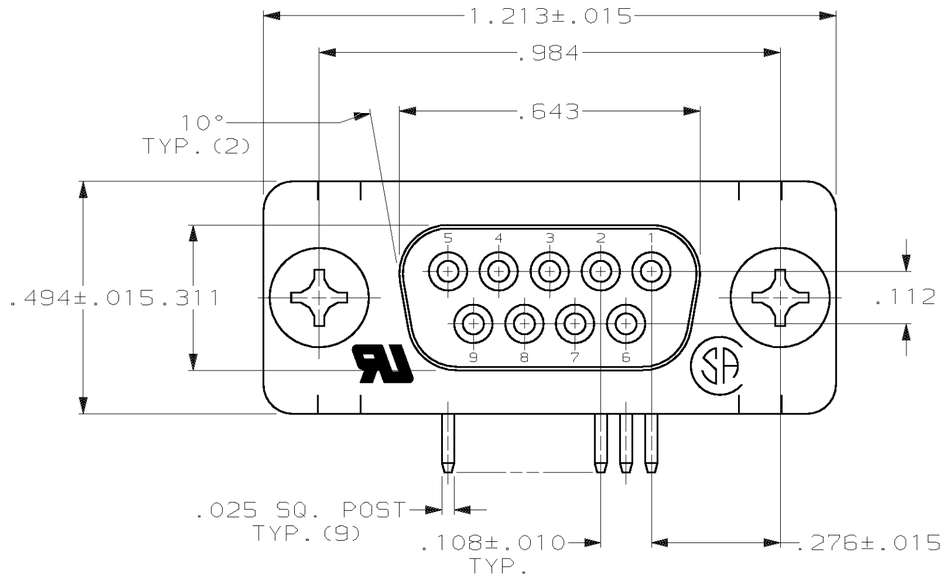

1. CONNECTOR MATES WITH ANY 9 POS. PLUG IN AMPLIMITE SERIES & COMPLIES WITH AMP SPEC. 108-40,005 WHERE APPLICABLE.
2. FLAME RETARDANT 94V-0 RATED THERMOPLASTIC; COLOR: BLACK.
3. STEEL PER ASTM A109.
4. PHOS. BRONZE PER QQ-B-750.
5. TIN PLATING PER MIL-T-10727, GOLD PLATING PER MIL-G-45204, NICKEL PLATING PER QQ-N-290.
6. TIN PLATED.
7. GOLD FLASH FOR A LENGTH OF .100 MINIMUM FROM MATING END, .000100 MINIMUM TIN-LEAD ON OPPOSITE END, BOTH OVER .000050 MINIMUM NICKEL.
8. .000030 MINIMUM GOLD FOR A LENGTH OF .100 MINIMUM FROM MATING END, .000100 MINIMUM TIN-LEAD ON OPPOSITE END, BOTH OVER .000050 MINIMUM NICKEL.
9. SCREWS ARE FOR -1 & -2.

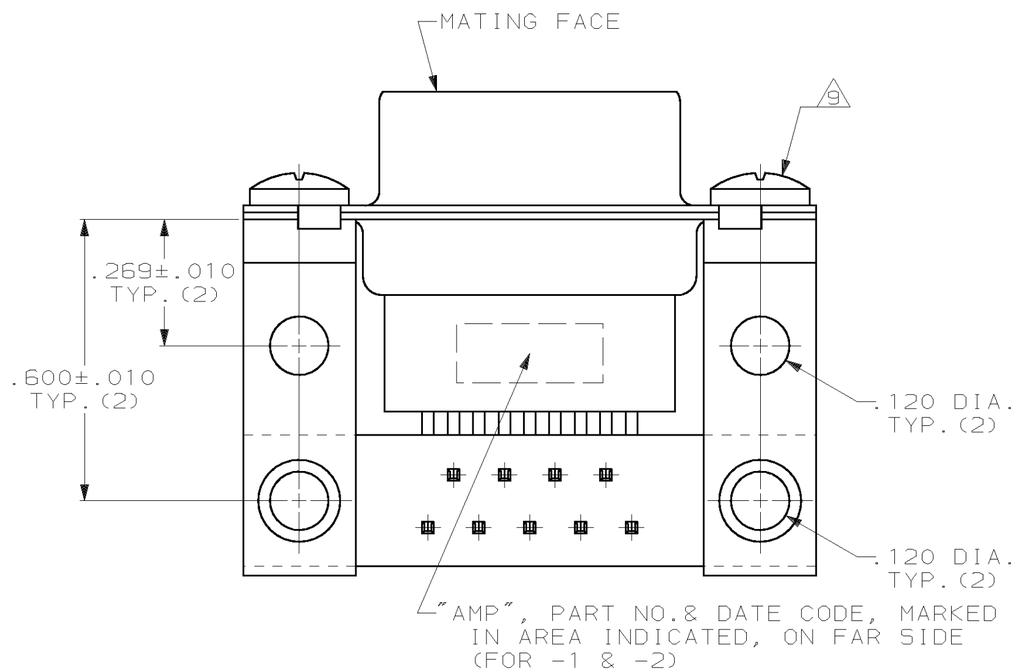

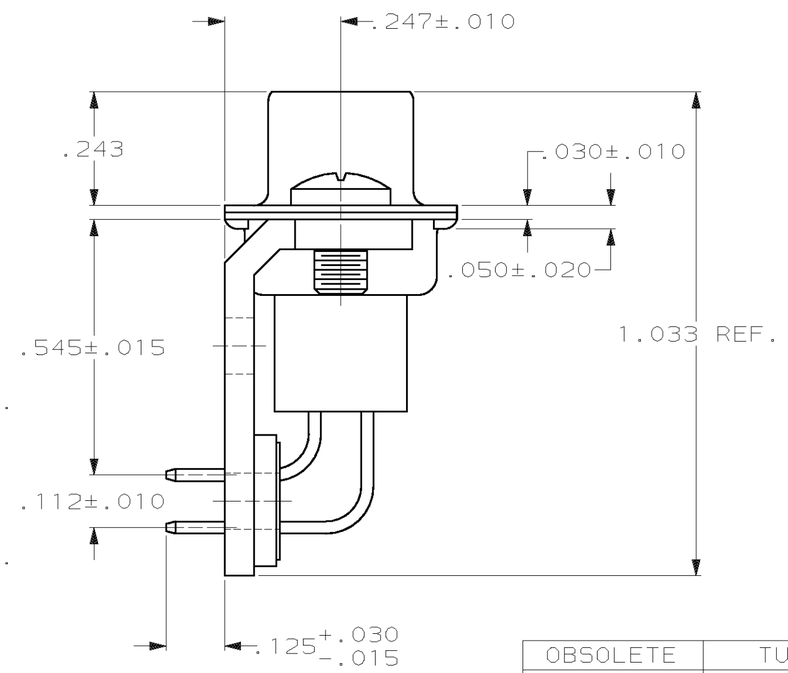

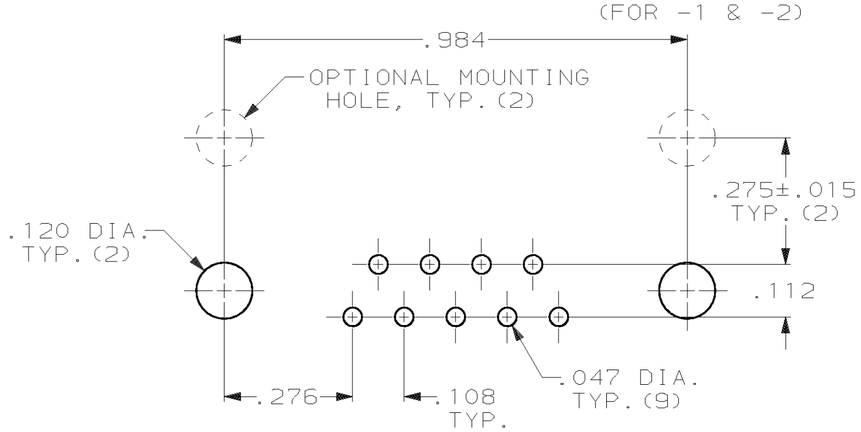

P.C. BOARD MOUNTING DIMENSIONS

OBSOLETE	TUBES	8	745112-4
OBSOLETE	TRAYS	8	745112-3
	TRAYS	8	745112-2
OBSOLETE	TRAYS	7	745112-1
	PACKAGING TYPE	CONTACT FINISH	PART NUMBER

745112

DO NOT SCALE PRINT.
UNLESS SPECIFIED
DIMENSIONS IN INCHES
TOLERANCES ON :
2 PLC DEC ±-
3 PLC DEC ± .005
ANGLES ± 2°

MATERIAL
MOLDED PARTS: 2
SHELLS & BRACKETS: 3
CONTACTS: 4

FINISH 5
SHELLS & BRACKETS: 6
CONTACTS: SEE TABLE

DR 12-29-83 J.GERACE
CHK 12-29-83 J.GERACE
APPD 3-15-84 P.SWEIGARD
APPD 3-15-84 J.ASSINI
PRODUCT SPEC -
APPLICATION SPEC -
WEIGHT _

AMP Incorporated
Harrisburg, PA 17105-3608

NAME
RECEPTACLE ASSEMBLY, SIZE 1, 9 POS., RIGHT ANGLE, .545 SERIES, .025 SQ. POSTS, AMPLIMITE™ HDP

SIZE	CAGE CODE	DRAWING NO
C	00779	C-745112
SCALE NTS		SHEET 1 OF 1

THIS DRAWING IS A CONTROLLED DOCUMENT FOR AMP INCORPORATED. IT IS SUBJECT TO CHANGE AND THE CONTROLLING ENGINEERING ORGANIZATION SHOULD BE CONTACTED FOR THE LATEST REVISION.

AMP 1471-6 REV 3-92

CUSTOMER DRAWING