THIS DRAWING IS UNPUBLISHED. RELEASED FOR PUBLICATION -.- .
© COPYRIGHT - BY TYCO ELECTRONICS CORPORATION. ALL RIGHTS RESERVED.

LOC	DIST
GP	00

REVISIONS

P	LTR	DESCRIPTION	DATE	DWN	APVD
	C	REVISED PER ECN 0S13-0156-05	14JUL06	JDP	SLB

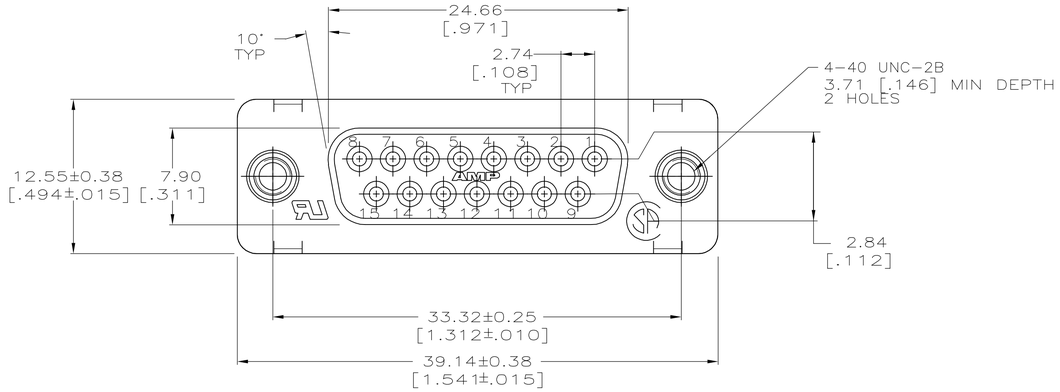

1. HOUSING: POLYESTER, UL 94V-0 RATED, BLACK.
   CONTACT: PHOSPHOR BRONZE.
   SCREWLOCK: BRASS.
   SHELL: CARBON STEEL PER ASTM A109.
2. SHELL: 5.08um [.000200] MIN TIN OVER 2.54um [.000100] MIN COPPER.
   CONTACT: 0.76μm [.000030] MIN GOLD FOR A LENGTH OF 1.40 [.055] MIN FROM MATING END, 2.54um [.000100] MIN TIN OR TIN-LEAD ON OPPOSITE END, BOTH OVER 0.76um [.000030] MIN NICKEL.
   SCREWLOCK: 2.54μm [.000100] MIN TIN-LEAD OVER 1.27μm [.000050] MIN NICKEL OVER COPPER FLASH.
3. TIN PLATING PER MIL-T-10727, GOLD PLATING PER MIL-G-45204, NICKEL PLATING PER QQ-N-290, COPPER PLATING PER MIL-C-14550.
4. DATUMS AND BASIC DIMENSIONS ESTABLISHED BY CUSTOMER.
5. 2.79[.110] MAX IN SHELL TAB CLINCH AREAS.
6. ORIENTATION IS OPTIONAL AND MAY NOT BE AS SHOWN.

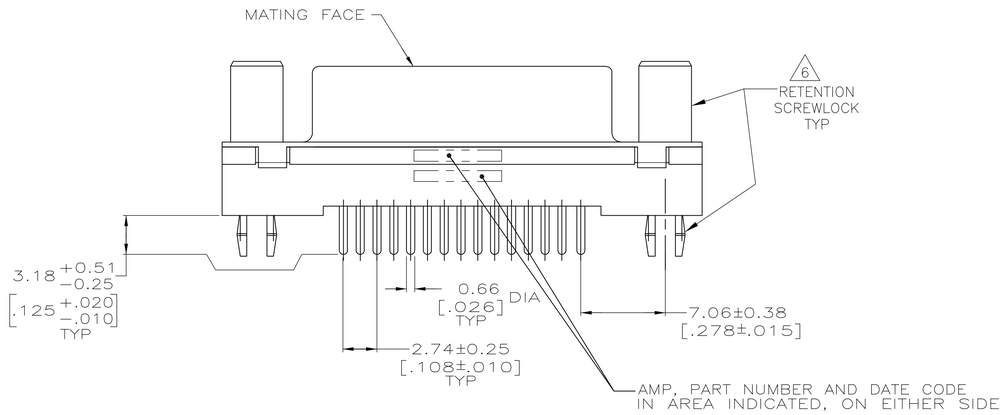

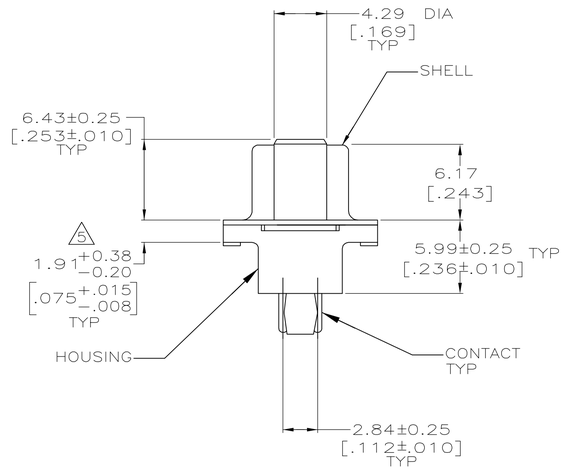

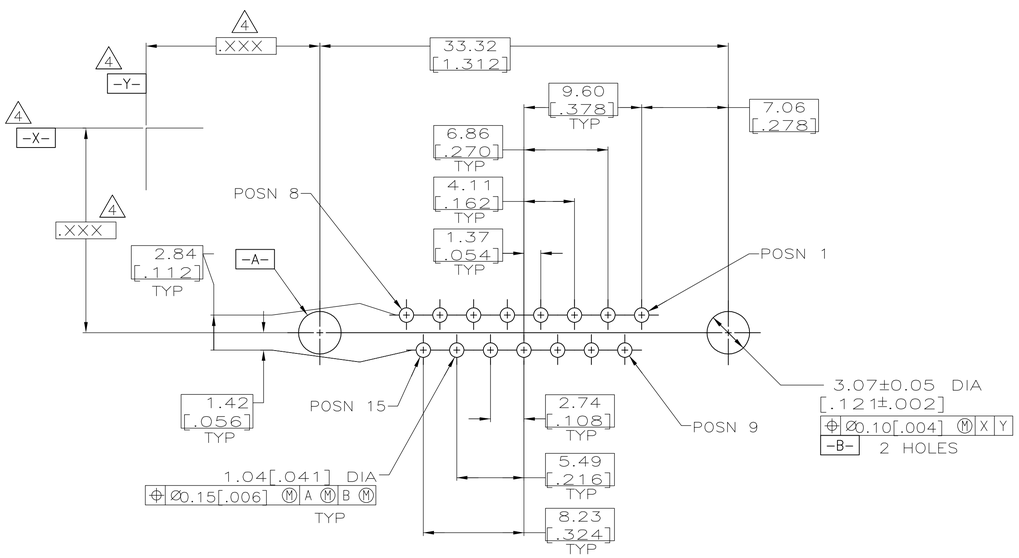

RECOMMENDED PC BOARD MOUNTING DIMENSIONS

787683-1

PART NUMBER

THIS DRAWING IS A CONTROLLED DOCUMENT.

DIMENSIONS: mm [INCHES]

TOLERANCES UNLESS OTHERWISE SPECIFIED:
0 PLC ± -
1 PLC ± -
2 PLC ± 0.13 [.005]
3 PLC ± -
4 PLC ± -
ANGLES ± -

MATERIAL 1

FINISH 2 3

DWN C.OBERMAN	12 FEB 96	
CHK R.STONE	15 FEB 96	
APVD B.TAYLOR	15 FEB 96	
PRODUCT SPEC 108-40025		
APPLICATION SPEC 114-40023		
WEIGHT —		

tyco Electronics

Tyco Electronics Corporation
Harrisburg, PA 17105-3608

NAME
RECEPTACLE ASSEMBLY, SIZE 2,
15 POSITION, FRONT METAL SHELL,
AMPLIMTE, HDP

SIZE	CAGE CODE	DRAWING NO	RESTRICTED TO
A1	00779	C-787683	—

CUSTOMER DRAWING | SCALE 4:1 | SHEET 1 OF 1 | REV C