THIS DRAWING IS UNPUBLISHED. RELEASED FOR PUBLICATION -,- .
© COPYRIGHT - BY TYCO ELECTRONICS CORPORATION. ALL RIGHTS RESERVED.

LOC	DIST
AD	00

REVISIONS

P	LTR	DESCRIPTION	DATE	DWN	APVD
	G	ECO-07-010999	30OCT2007	RB	JO

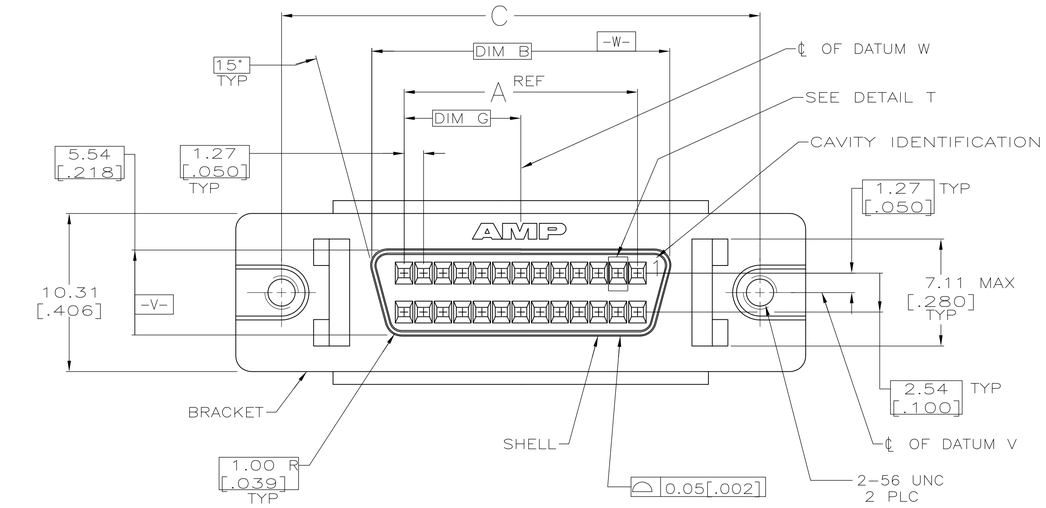

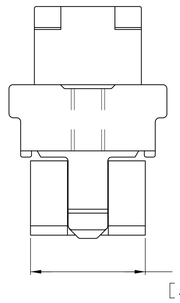

TERMINATED VIEW

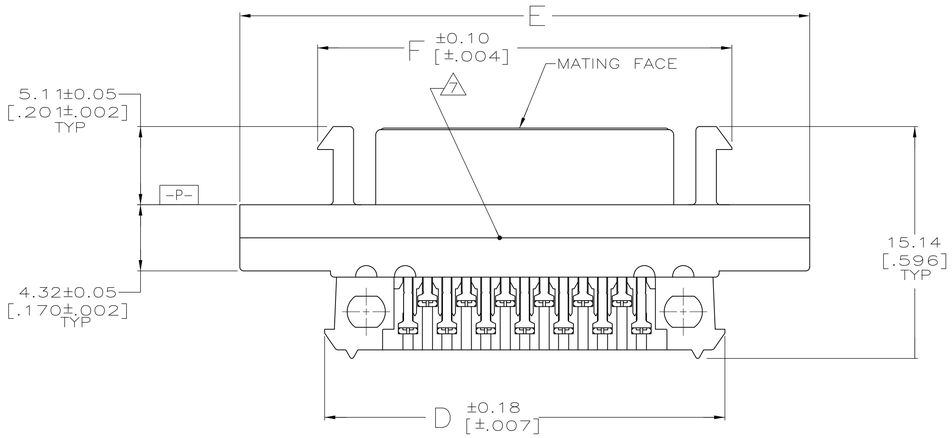

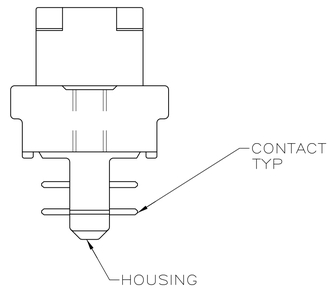

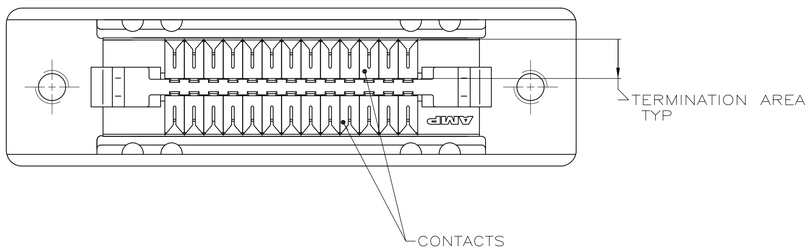

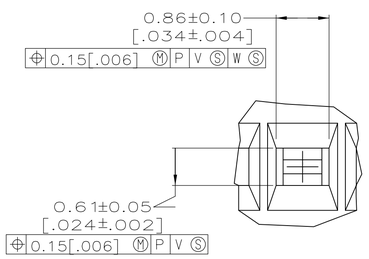

DETAIL T
SCALE 20:1
TYPICAL

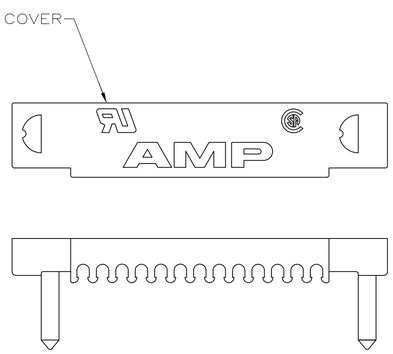

1. CONTACTS: PHOSPHOR BRONZE.
SHELL: CARBON STEEL.
HOUSING: POLYESTER, BLACK, UL 94V-0 RATED.
TERMINATING COVERS: POLYESTER, UL 94V-0 RATED, COLOR: SEE TABLE.
BRACKET: ZINC.

2. CONTACTS:
0.76μm [.000030] MIN GOLD OR 0.076-0.127μm [.000003-.000005] GOLD FLASH OVER 0.76μm [.000030] MIN PALLADIUM NICKEL FOR A LENGTH OF 0.64 [.025] MIN, 0.13 [.005] MAX FROM MATING END, 1.27μm [.000050] MIN TIN-LEAD IN TERMINATION AREA, BOTH OVER 1.27μm [.000050] MIN NICKEL.

3. SHELL:
5.08μm [.000200] MIN NICKEL OVER 1.27μm [.000050] MIN COPPER.

4. RECOMMENDED WIRE: 30 AWG - 28 AWG, SEE TABLE FOR INSULATION DIA.
WIRE MUST BE APPROVED BY AMP ENGINEERING.

5. BRACKET:
5.08μm [.000200] MIN NICKEL OVER 7.62μm [.000300] MIN COPPER.

6. COVERS PACKAGED SEPARATE FROM CONNECTORS IN SAME SHIPPING CONTAINER.

7. DATE CODE THIS AREA, EITHER SIDE, SEE TABLE.

8. OBSOLETE PART NUMBER.

9. CONTACTS:
0.76μm [.000030] MIN GOLD OR 0.076-0.127μm [.000003-.000005] GOLD FLASH OVER 0.76μm [.000030] MIN PALLADIUM NICKEL FOR A LENGTH OF 0.64 [.025] MIN, 0.13 [.005] MAX FROM MATING END, 1.27μm [.000050] MIN TIN IN TERMINATION AREA, BOTH OVER 1.27μm [.000050] MIN NICKEL.

10. ROHS 2002/95/EC COMPLIANT

FINISH	DATE CODE	TERMINATING COVERS COLOR	WIRE OUTER DIA 4	G	F	E	D	C	B	A	NO OF POSN	
10 9	YES	GRAY	0.74-0.79 DIA [.029-.031]	15.24 [.600]	42.29 [1.665]	52.45 [2.065]	41.38 [1.629]	46.48 [1.830]	34.70 [1.366]	30.48 [1.200]	50	6-786862-5
10 9	YES	BLACK	0.81-0.91 DIA [.032-.036]	15.24 [.600]	42.29 [1.665]	52.45 [2.065]	41.38 [1.629]	46.48 [1.830]	34.70 [1.366]	30.48 [1.200]	50	5-786862-5
2	NO	GRAY	0.74-0.79 DIA [.029-.031]	31.12 [1.225]	74.04 [2.915]	84.20 [3.315]	73.13 [2.879]	78.23 [3.080]	66.45 [2.616]	62.23 [2.450]	100	8 1-786862-9
2	NO	GRAY	0.74-0.79 DIA [.029-.031]	20.96 [.825]	53.72 [2.115]	63.88 [2.515]	52.81 [2.079]	57.91 [2.280]	46.13 [1.816]	41.91 [1.650]	68	8 1-786862-7
2	YES	GRAY	0.74-0.79 DIA [.029-.031]	15.24 [.600]	42.29 [1.665]	52.45 [2.065]	41.38 [1.629]	46.48 [1.830]	34.70 [1.366]	30.48 [1.200]	50	1-786862-5
2	NO	GRAY	0.74-0.79 DIA [.029-.031]	7.62 [.300]	27.05 [1.065]	37.21 [1.465]	26.14 [1.029]	31.24 [1.230]	19.46 [.766]	15.24 [.600]	26	8 1-786862-2
2	NO	BLACK	0.81-0.91 DIA [.032-.036]	31.12 [1.225]	74.04 [2.915]	84.20 [3.315]	73.13 [2.879]	78.23 [3.080]	66.45 [2.616]	62.23 [2.450]	100	8 786862-9
2	NO	BLACK	0.81-0.91 DIA [.032-.036]	20.96 [.825]	53.72 [2.115]	63.88 [2.515]	52.81 [2.079]	57.91 [2.280]	46.13 [1.816]	41.91 [1.650]	68	8 786862-7
2	YES	BLACK	0.81-0.91 DIA [.032-.036]	15.24 [.600]	42.29 [1.665]	52.45 [2.065]	41.38 [1.629]	46.48 [1.830]	34.70 [1.366]	30.48 [1.200]	50	786862-5
2	NO	BLACK	0.81-0.91 DIA [.032-.036]	7.62 [.300]	27.05 [1.065]	37.21 [1.465]	26.14 [1.029]	31.24 [1.230]	19.46 [.766]	15.24 [.600]	26	8 786862-2

THIS DRAWING IS A CONTROLLED DOCUMENT.

DIMENSIONS: MM [INCHES]

TOLERANCES UNLESS OTHERWISE SPECIFIED:
0 PLC ± -
1 PLC ± -
2 PLC ± 0.13 [.005]
3 PLC ± -
4 PLC ± -
ANGLES ± -

MATERIAL 1

FINISH 2 3 5 9

DWN C.OBERMAN 04/29/93
CHK R.STONE 5-10-93
APVD J OLSON 19DEC2005
PRODUCT SPEC 108-1228
APPLICATION SPEC 114-40029
WEIGHT -

CUSTOMER DRAWING

Tyco Electronics
Tyco Electronics Corporation
Harrisburg, Pa 17105-3608

NAME
RECEPTACLE KIT, UNASSEMBLED, PANEL MOUNT, W/ WIRE TERMINATING COVER, W/ LATCH BLOCK,

SIZE	CAGE CODE	DRAWING NO	RESTRICTED TO
A1	00779	C-786862	-

SCALE 5:1 SHEET 1 OF 1 REV G