THIS DRAWING IS UNPUBLISHED. RELEASED FOR PUBLICATION -.- .
© COPYRIGHT – BY TYCO ELECTRONICS CORPORATION. ALL RIGHTS RESERVED.

LOC	DIST
AD	00

REVISIONS

P	LTR	DESCRIPTION	DATE	DWN	APVD
	H1	ECO-05-013447	19DEC2005	RB	JO

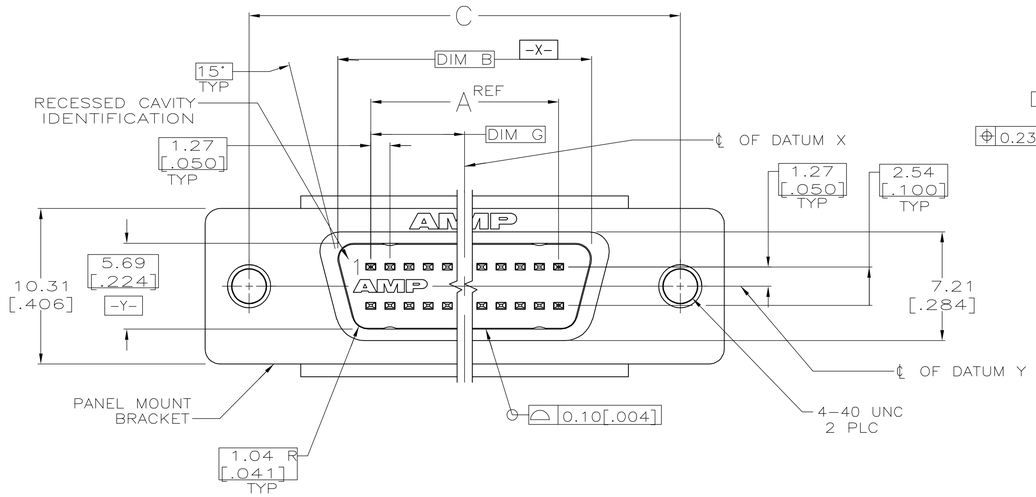

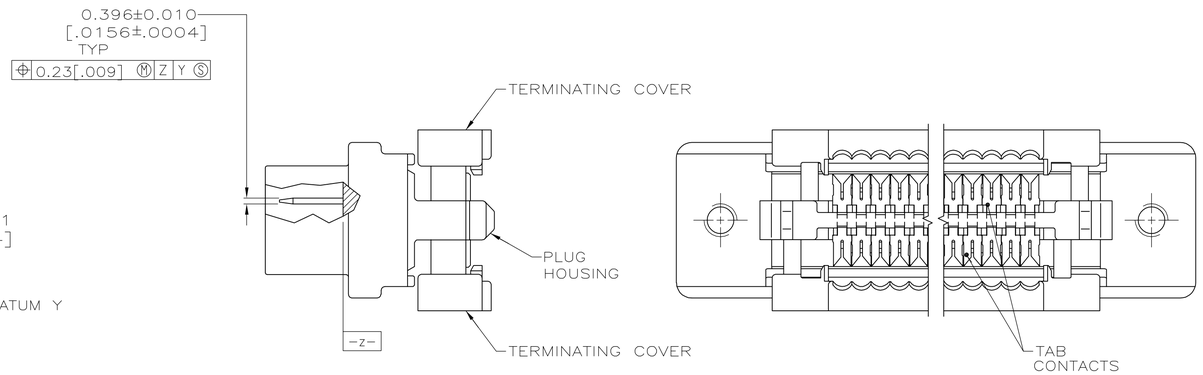

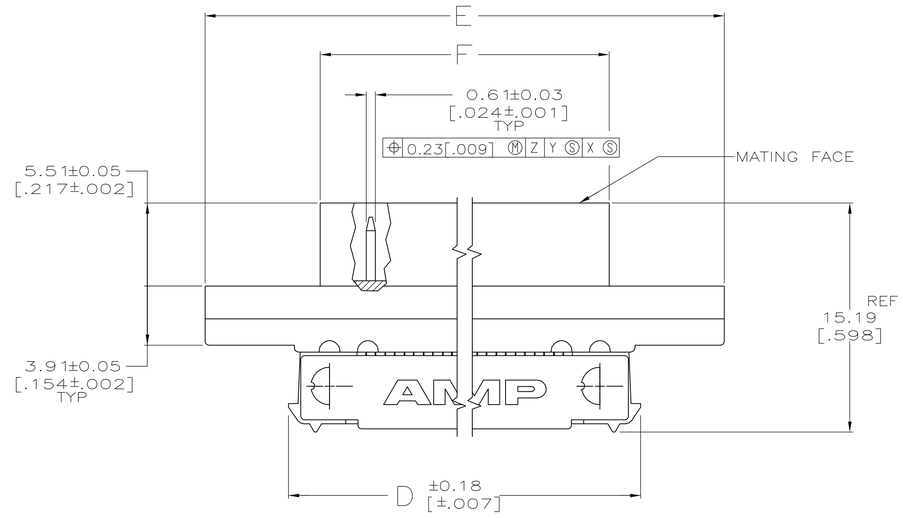

1. MATERIAL:
   TAB CONTACTS– PHOSPHOR BRONZE.
   PANEL MOUNT BRACKET– ZINC.
   PLUG HOUSING AND TERMINATION COVERS– UL V-0 RATED THERMOPLASTIC, COLOR: BLACK.

2. PLATING:
   TAB CONTACTS– 0.00076 [.000030] MINIMUM GOLD PLATE IN CONTACT AREA, 0.00127 [.000050] MINIMUM BRIGHT TIN–LEAD PLATE IN TERMINATION AREA, ALL OVER 0.00127 [.000050] MINIMUM NICKEL.
   PANEL MOUNT BRACKET– 0.00508 [.000200] MINIMUM NICKEL PLATE OVER 0.00762 [.000300] MINIMUM COPPER.

3. RECOMMENDED WIRE:
   28 AWG OR 30 AWG, SOLID OR 7 STRANDED, WITH A 0.74–0.91 [.029–.036] INSULATION DIA, OR AMP .050 CENTERLINE 28 AWG, STRANDED, PVC, FLAT GRAY RIBBON CABLE, WIRE MUST BE APPROVED BY AMP INCORPORATED.

4. PLATING:
   TAB CONTACTS– 0.00076 [.000030] MINIMUM GOLD PLATE IN CONTACT AREA, 0.00127 [.000050] MINIMUM MATTE TIN PLATE IN TERMINATION AREA, ALL OVER 0.00127 [.000050] MINIMUM NICKEL.
   PANEL MOUNT BRACKET– 0.00508 [.000200] MINIMUM NICKEL PLATE OVER 0.00762 [.000300] MINIMUM COPPER.

5. ROHS 2002/95/EC COMPLIANT

5	4	31.12 [1.225]	68.94 [2.714]	84.20 [3.315]	73.13 [2.879]	78.23 [3.080]	66.60 [2.622]	62.23 [2.450]	100	5-749879-9
5	4	15.24 [.600]	37.19 [1.464]	52.45 [2.065]	41.38 [1.629]	46.48 [1.830]	34.85 [1.372]	30.48 [1.200]	50	5-749879-5
	2	31.12 [1.225]	68.94 [2.714]	84.20 [3.315]	73.13 [2.879]	78.23 [3.080]	66.60 [2.622]	62.23 [2.450]	100	749879-9
	2	15.24 [.600]	37.19 [1.464]	52.45 [2.065]	41.38 [1.629]	46.48 [1.830]	34.85 [1.372]	30.48 [1.200]	50	749879-5
FINISH		G	F	E	D	C	B	A	NO OF POSN	

THIS DRAWING IS A CONTROLLED DOCUMENT.

DIMENSIONS: MM [INCHES]

TOLERANCES UNLESS OTHERWISE SPECIFIED:
0 PLC ± –
1 PLC ± –
2 PLC ± 0.13 [.005]
3 PLC ± –
4 PLC ± –
ANGLES ± –

MATERIAL 1
FINISH 2 4

DWN M.MCCAFFREY 08/29/89
CHK J.BROSCHARD 09/05/89
APVD –
PRODUCT SPEC 108-1228
APPLICATION SPEC 114-40029
WEIGHT –

tyco Electronics — Tyco Electronics Corporation, Harrisburg, Pa 17105-3608

NAME: PLUG CABLE ASSEMBLY, FLAT TOP, PANEL MOUNT, AMPLIMITE .050 Series

SIZE	CAGE CODE	DRAWING NO	RESTRICTED TO
A1	00779	C-749879	–

CUSTOMER DRAWING — SCALE 5:1 — SHEET 1 OF 1 — REV H1