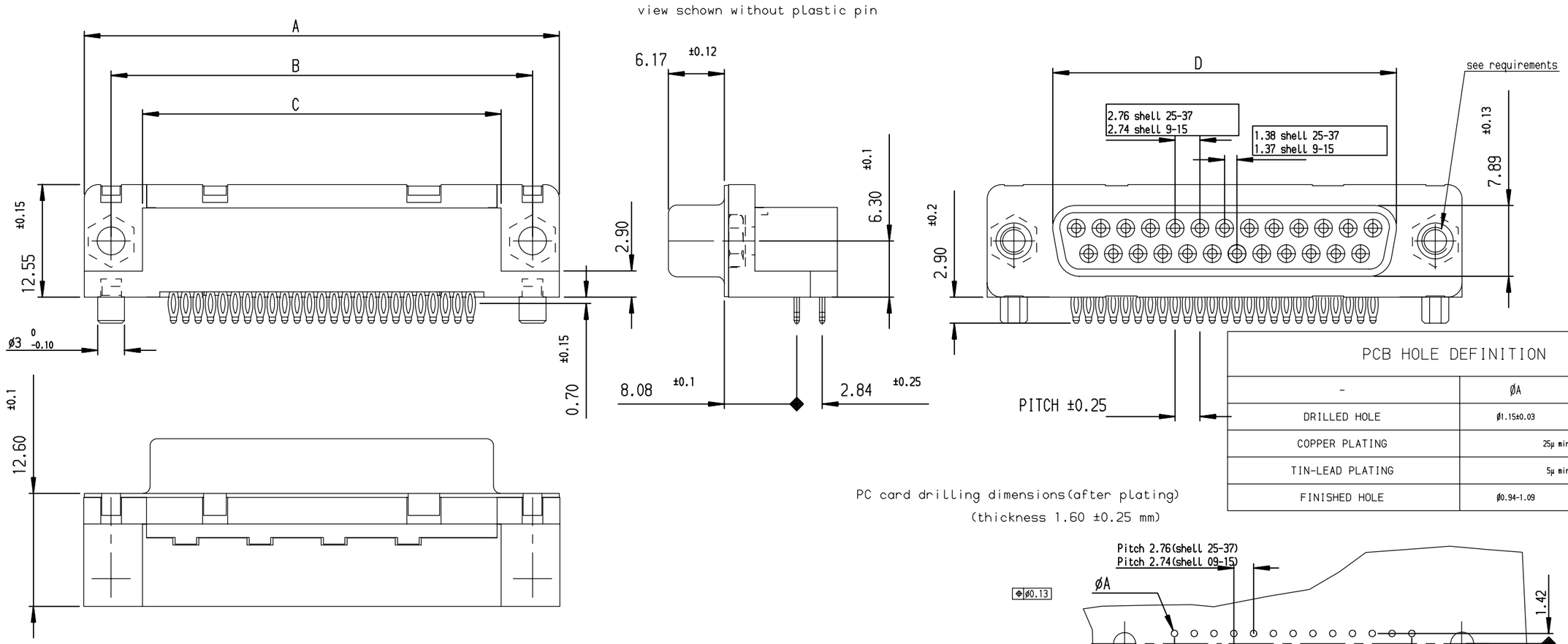

PCB HOLE DEFINITION		
-	ØA	ØB
DRILLED HOLE	Ø1.15±0.03	Ø3.22±0.03
COPPER PLATING	25µ mini	
TIN-LEAD PLATING	5µ mini	
FINISHED HOLE	Ø0.94-1.09	Ø3.02-3.20

PC card drilling dimensions(after plating)
(thickness 1.60 ±0.25 mm)

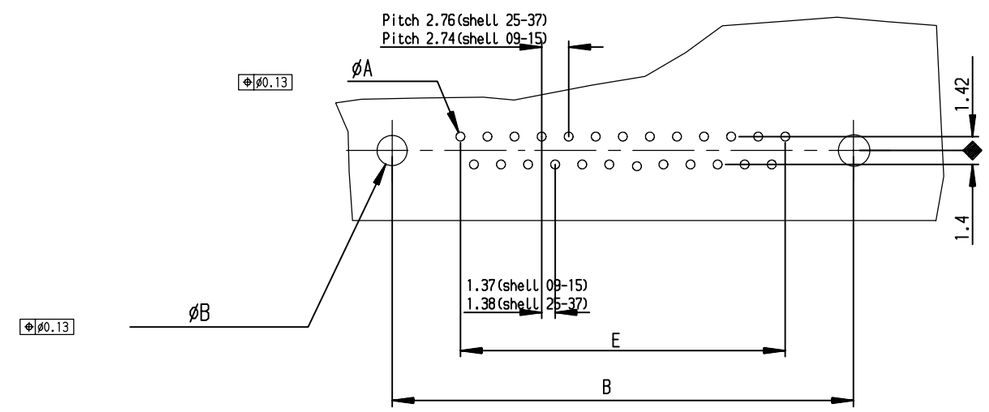

SHELL	A± 0.38	B± 0.12	C± 0.10	D± 0.25 0	E± 0.07	PART NUMBER	PART NUMBER
09	30.81	24.99	18.00	16.21	10.96	D09S80C4PX00	D09S80C6PX00
15	39.14	33.32	26.32	24.54	19.18	D15S80C4PX00	D15S80C6PX00
25	53.03	47.04	40.04	38.25	33.12	D25S80C4PX00	D25S80C6PX00
37	69.32	63.50	56.50	54.71	49.68	D37S80C4PX00	D37S80C6PX00
						Gold flash	0,76 µ gold

REQUIREMENTS

Technical characteristics:

Shell:steel tin plated

Insulators:self-extinguishing thermoplastic,ULclass94V0

Contacts:phosphor bronze, gold (for thickess see table)

over 2 µ mini nickel on active area and, flash to

1.5µ maxi SnPb over 1 µ mini nickel on termination end

Cycles > 200 for plating 4

Cycles > 500 for plating 6

Gauge retention force:0.14N

Accessories:

--

Threaded insert:UNC 4.40,brass,tin plated

retention against torque 0.70N.m minimum

--

--

Electrical characteristics:

max.current rating:5A

Test voltage:1000V

Rated voltage:300V

Contact resistance:<25mo

Shell resistance:<5mo

Insulation resistance:>5000Mo

Climatic characteristics:

Operating temperature range:-55°c +125°c

Dimensions:

in accordance with MIL-C-24308B and DIN41652

REV F - 2006-04-17

Detail of plastic pin

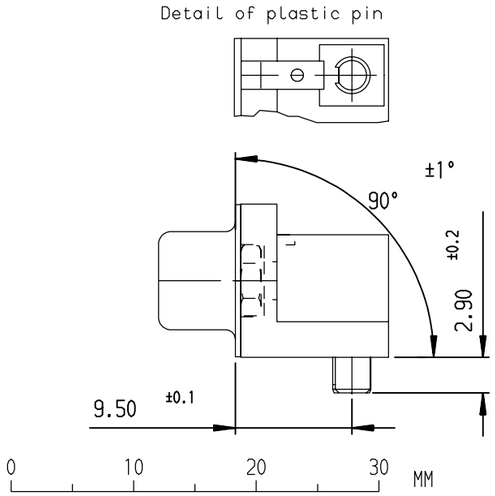

rev	ecn no	dr	date
C	-	MAS	1999//07/23
D	LS06-0140	LGO	2006/09/23
-	-	-	-
-	-	-	-
-	-	-	-
-	-	-	-
-	-	-	-

European Views

www.fciconnect.com

surface ISO 1302 ✓ | tolerance std ISO 406 ISO 1101 | projection | mm

TOLERANCES UNLESS OTHERWISE SPECIFIED

Dr	PESSON	1995/10/30	ANGULAR	LINEAR	0.X	±0.1
Eng	PESSON	1995/10/30			0.XX	±0.1
Chr	LEGARE	1995/10/30	0.XX° ±2°		0.XXX	±0.1
Appr	LEGARE	1995/10/30	Product family		D-SUB	

size A3 | Scale 2

ECN LS06-0140

Spec ref -

title: FEMALE CONNECTOR DELTA D USA
right angled press fit

catalog no -

dwg no C01-8646-0415 | Rev. D

CUSTOMER | sheet 1 of 1

PDM: Rev:D STATUS:Released Printed: Nov 25, 2006

Copyright FCI.