5200N Series Tubeaxial

127x127x38mm

- DC fans with electronically commutated external rotor motor. Fully integrated commutation electronics.
- With electronic protection against reverse polarity, blocking and overloading.
- Mounting from either face using four 4.3 mm holes.
- Fan of fiberglass reinforced plastic. PBTP housing, PA impeller.
- Air exhaust over struts. Rotational direction CCW looking at rotor.
- Electrical connection via 2 leads AWG 22, TR 64. Stripped and tinned ends.
- UL, CSA, VDE approvals on some models, please contact application engineering.

Part Number	Curve	CFM @ 0	VDC	Volt. Range	Power (W)	dBA	Max Amb. Temp C	Bearing Type	Features	Wgt. (lbs)
5212NM	1	110.1	12	7 to 14.5	4.6	43	75	Ball	Leads	0.68
5212NN	2	127.1	12	7 to 14	6.0	46	75	Ball	Leads	0.68
5212NH	3	148.3	12	7 to 14	9.8	51	70	Ball	Leads	0.68
5214NM	1	110.1	24	12 to 28	4.6	43	75	Ball	Leads	0.68
5214NN	2	127.1	24	12 to 28	6.0	46	75	Ball	Leads	0.68
5214NH	3	148.3	24	12 to 28	9.8	51	70	Ball	Leads	0.68
5214NHH	4	197.0	24	18 to 28	19.0	57	55	Ball	Leads	0.68
5218NM	1	110.1	48	40 to 56	5.0	43	75	Ball	Leads	0.68
5218NN	2	127.1	48	40 to 56	6.5	46	65	Ball	Leads	0.68
5218NH	3	148.3	48	40 to 53	10.0	51	55	Ball	Leads	0.68

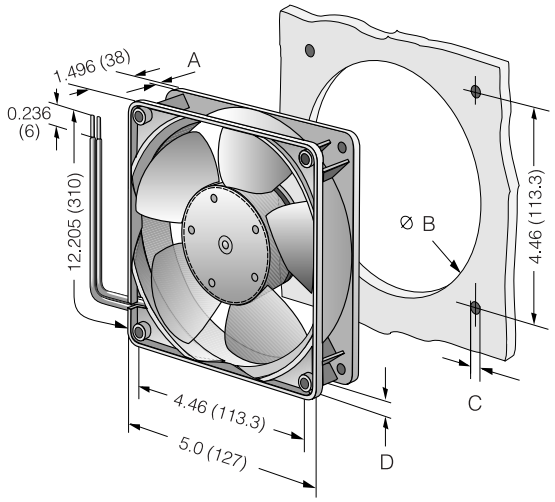

Type	A	B	C	D
5214NHH	0.276 (7)	4.881 (124)	0.185 (4.7)	0.185 (4.7)
All Others	0.236 (6)	4.843 (123)	0.177 (4.5)	0.169 (4.3)

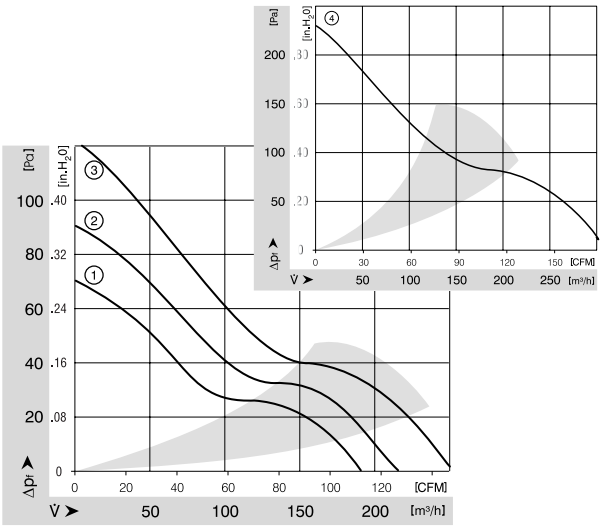

ebm-papst Inc., 2006 © ebm-papst Inc. reserves the right to change any specifications or data without notice