Distinctive Characteristics

Each half of the rocker face is distinctly illuminated due to partitioned rocker construction and dual lamps.

Numerous lighting effects achievable by using white or clear rocker with colored filters or lamp covers, plus using different colors on each side of rocker.

Snap-in mounting allows fast, easy installation of switch into panel.

Stainless steel retaining clips provide secure mounting over a wide range of panel thicknesses.

Dual incandescent or neon lamps operate independently of each other.

Front panel relamping.

Stationary lamp sockets are independent of rocker actuation, protecting lamps from damage due to shock and vibration.

Switch contacts are rated at 10 amps 125V AC which makes these devices well-suited for various power switching applications.

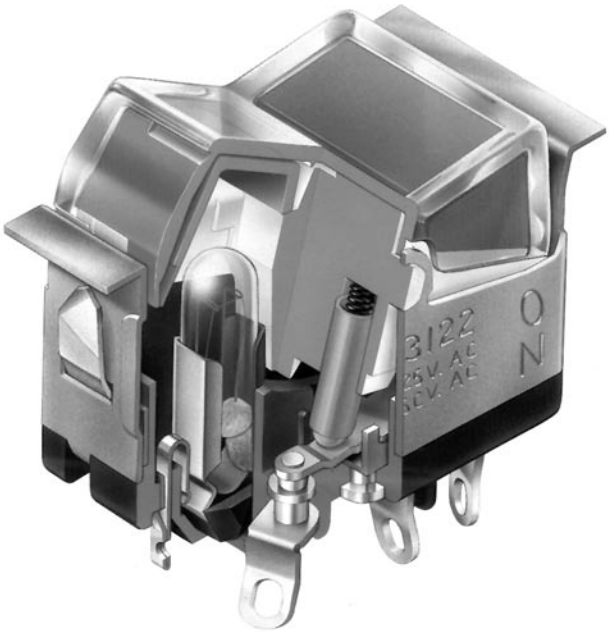

Actual Size

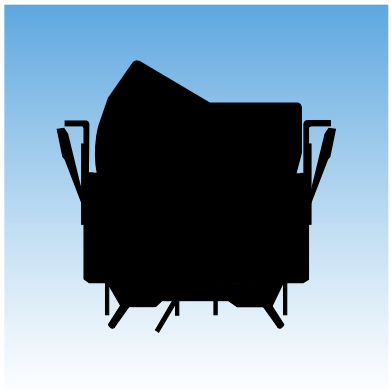

General Specifications

Electrical Capacity

Resistive Load: 10A @ 125V AC, 6A @ 250V AC, or 6A @ 30V DC
Inductive Load: 5A @ 125V AC (P. F. @ .60)

Other Ratings

Contact Resistance: 10 milliohms maximum
Insulation Resistance: 200 megohms minimum @ 500V DC
Dielectric Strength: 1,500V AC minimum for 1 minute minimum
Mechanical Life: 30,000 operations minimum
Electrical Life: 10,000 operations minimum
Nominal Operating Force: 11.77N for maintained & 17.65N for momentary
Angle of Throw: 34°

Materials & Finishes

Housing: Steel with chrome plating
Movable Contacts: Silver clad copper with silver plating
Stationary Contacts: Copper with silver plating
Base: Melamine
Common Terminal: Copper with silver plating
End Terminals: Brass with silver plating
Lamp Terminals: Phosphor bronze with nickel plating

Environmental Data

Operating Temperature Range: –20°C through +50°C (–4°F through +122°F)
Humidity: 90 ~ 95% humidity for 96 hours @ 40°C (104°F)
Vibration: 10 ~ 55Hz with peak-to-peak amplitude of 1.5mm traversing the frequency range & returning in 1 minute; 3 right angled directions for 2 hours
Shock: 50G (490m/s^2) acceleration (tested in 3 right angled directions, with 3 shocks in each direction)

Installation

Cap Installation Force: 19.61N (4.41 lbf)
SolderingTime & Temperature: Manual Soldering: See Profile A in Supplement section.

Standards & Certifications

UL & C-UL Recognized: All models recognized at 10A @ 125V AC & 6A @ 250V AC;
UL File No. WOYR2.E44145 & C-UL File No. WOYR8.E44145;
add "/U" to end of part number to order UL mark on switch & add "/C-UL" to end of part number to order C-UL mark on switch (equivalent to CSA certification).

TYPICAL SWITCH ORDERING EXAMPLE

LW31	2	2	–	H	4	C	F	–	A

POLE

2	DPDT

CIRCUITS

	Up	Center	Down
2	ON	NONE	ON
3	ON	OFF	ON
5	ON	NONE	(ON)
8	(ON)	OFF	(ON)
9	ON	OFF	(ON)

( ) = Momentary

LAMPS

Incandescent	
E	6-volt
F	12-volt
H	18-volt
K	24-volt
L	28-volt
Neon	
N	110-volt
Not suitable with green & blue	
Nonilluminated	
0	No Lamp

BEZEL

No Code	No Bezel
A	Black
B	White
C	Red
D	Amber
E	Yellow
F	Green
G	Blue
H	Gray

ROCKER CAPS

1	White without filters or lamp covers
2	White with filters
3	White with lamp covers
4	Clear with filters

LAMP COVER/ FILTER COLORS FOR UP POSITION

0	No Cover/Filter
Lamp Cover	
C	Red
D	Amber
F	Green
Filter	
B	White
C	Red
D	Amber
E	Yellow
F	Green
G	Blue

LAMP COVER/ FILTER COLORS FOR DOWN POSITION

0	No Cover/Filter
Lamp Cover	
C	Red
D	Amber
F	Green
Filter	
B	White
C	Red
D	Amber
E	Yellow
F	Green
G	Blue

DESCRIPTION FOR TYPICAL ORDERING EXAMPLE

LW3122-H4CF-A

Clear Rocker with Red Filter in Up Position and Green Filter in Down Position

18-volt Incandescent Lamp

Black Bezel

DPDT ON-NONE-ON Circuit

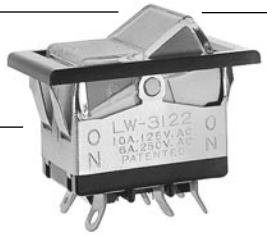

IMPORTANT:

Switches are supplied without UL & C-UL markings unless specified. Specific models & ratings noted on General Specifications page.

POLES & CIRCUITS

		Rocker Position ( ) = Momentary			Connected Terminals			Throw & Power/Lamp Schematics
Pole	Model	Up	Center	Down	Up	Center	Down	Notes: Terminal numbers are not actually on switch. Lamp circuit is isolated and requires an external power source.
DP	LW3122	ON	NONE	ON	2-3 5-6	OPEN	2-1 5-4	DPDT
	LW3123	ON	OFF	ON				
	LW3125	ON	NONE	(ON)				
	LW3128	(ON)	OFF	(ON)				
	LW3129	ON	OFF	(ON)				

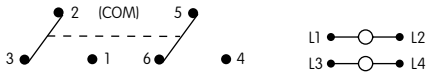

LAMP CODES & SPECIFICATIONS

Electrical specifications are determined at a basic temperature of 25°C. Lamp circuit is independent of switch operation.
For dimension drawing of lamps see Accessories & Hardware section.
For neon, if the source voltage is greater than rated voltage, a ballast resistor is required. The ballast resistor calculation and more lamp detail are shown in the Supplement section. Neon not for use with green lamp cover or blue and green filters.

Incandescent & Neon Lamps for Solid & Design Caps

AT602 Incandescent **AT602N Neon**

T-1½ Pilot Slide Base

	E	F	H	K	L	N
Voltage V	6V AC	12V AC	18V AC	24V AC	28V AC	110V AC
Current I	80mA	50mA	35mA	25mA	22mA	1.5mA
MSCP	.159	.215	.398	.215	.247	NA
Endurance Hours	2,000 Average					15,000 Average
Ambient Temperature Range	−20°C ~ +50°C					−20°C ~ +50°C

Recommended Resistor for Neon: 33K ohms for 110V AC; 100K ohms for 220V AC

0 **No Lamp** Code 0 indicates that no lamp is used.

ROCKER CAPS, LAMP COVER & FILTER

1 **AT420B White Rocker without Filters or Lamp Covers**

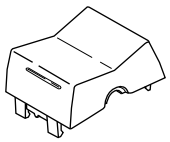

2 **AT420B White Rocker with Filters**

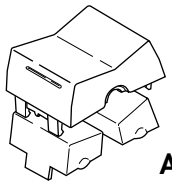

AT421

3 **AT420B White Rocker with Lamp Covers**

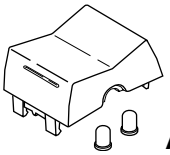

AT416

4 **AT420J Clear Rocker with Filters**

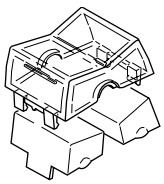

AT421

Rocker Cap Material: Polycarbonate

Finish: Glossy

Indicate the lamp cover or filter color desired in both the up and down positions.

C Red
D Amber
F Green

AT416 Lamp Cover

Material: Silicon Rubber

B White
C Red
D Amber
E Yellow
F Green
G Blue

AT421 Filter

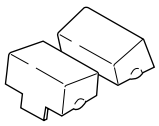

Material: Polycarbonate

BEZEL & BEZEL COLORS

AT206 Bezel & Color Codes

No Code	No Bezel	B	White	D	Amber	F	Green	H	Gray
A	Black	C	Red	E	Yellow	G	Blue		

Material: Polycarbonate

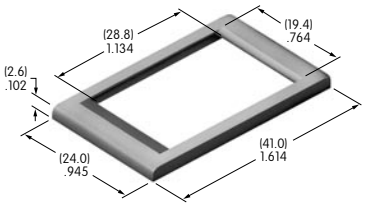

TYPICAL SWITCH DIMENSIONS

Solder Lug • Without Bezel

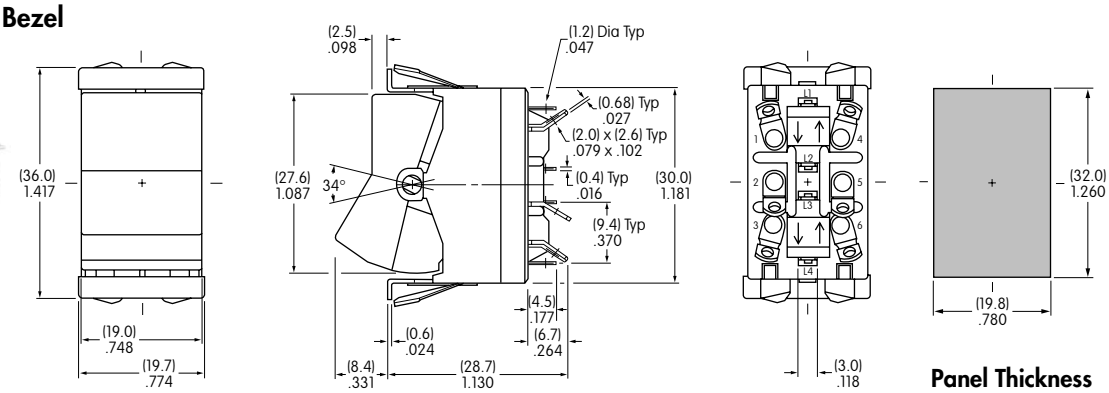

Panel Thickness
.039″ ~ .157″
(1.0mm ~ 4.0mm)

LW3122-F4CF

Actuator in UP position

Solder Lug • With Bezel

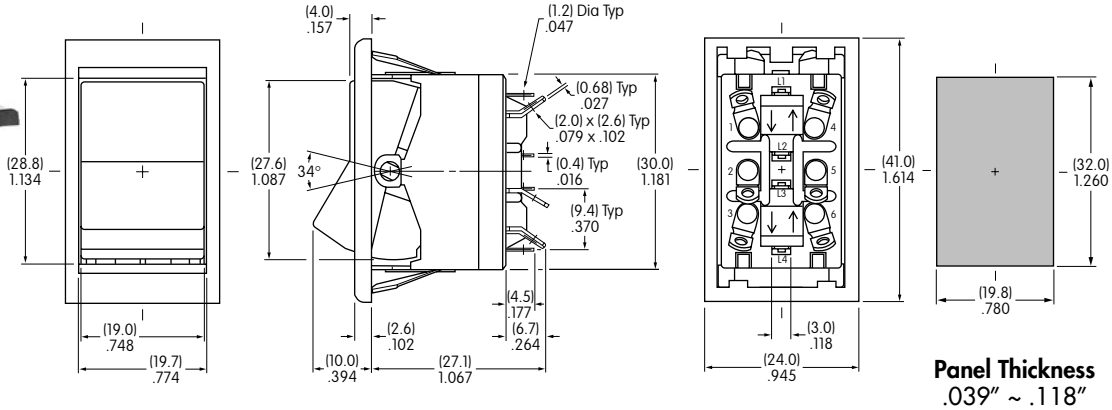

Panel Thickness
.039″ ~ .118″
(1.0mm ~ 3.0mm)

LW3122-F3CF-A

Actuator in UP position

OPTIONAL ACCESSORY

AT107 Lamp Extractor

Lamps can be changed without removing the switch from the panel. AT107 assists in removing lamps from the switch.

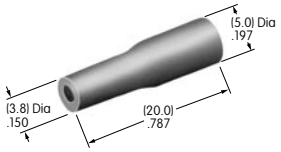

LEGENDS

Inscriptions can be placed on the rocker or filter.

Details regarding screen printing and engraving may be obtained from the factory.