SHEET OF

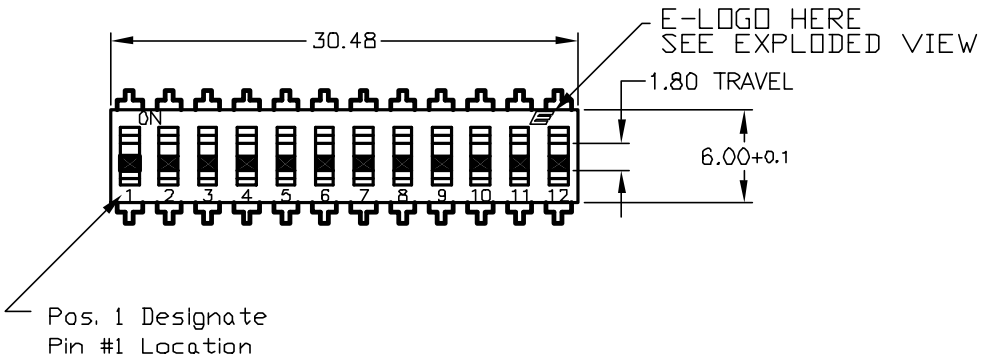

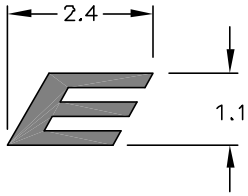

EXPLODED VIEW

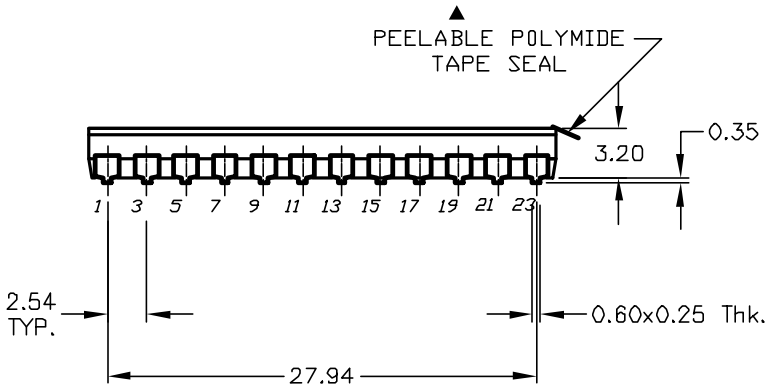

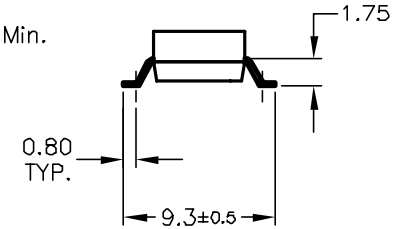

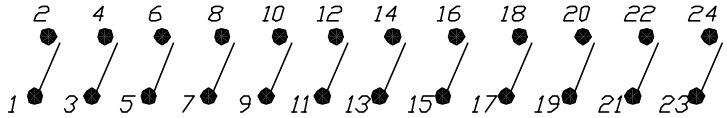

CIRCUIT 12 POSITION

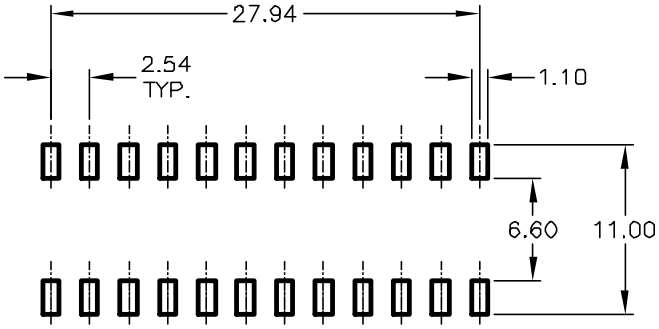

RECOMMENDED P.C.B. LAYOUT

NOTES:
1. ALL DIMENSIONS IN MM
2. GENERAL TOLERANCE: X.X=±0.4
   X.XX=±0.25
3. TERM. NOS. FOR REFERENCE ONLY.
4. CONTACT RATINGS: 25mA @24VDC.
▲ 5. CONTACT MATERIAL:
   CONTACTS: BRASS w/Gold Plate
   TERMINALS: BRASS w/GOLD Plate
▲ 6. PACKAGED: DISPENSING TUBES
   WITH ALL POLES IN THE "OFF" POSITION.
7. TAPE SEAL FOR FLUX WASH.
8. ▲ DESIGNATE MAJOR:

REV.	ECN No.	DESCRIPTION	DATE	CHKD
A	12277	RELEASED FOR PRODUCTION	7/1/02	CJB

THE INFORMATION CONTAINED IN THIS DOCUMENT IS PROPRIETARY TO E-SWITCH AND IS NOT TO BE COPIED OR TRANSFERRED

E-SWITCH®

TITLE: KAJ12 TG GT
LOW PROFILE W/TAPE SEAL

SCALE	DATE	DR	DWG	REV
2:1	7/1/02	CJB	W825331	A