SHEET OF

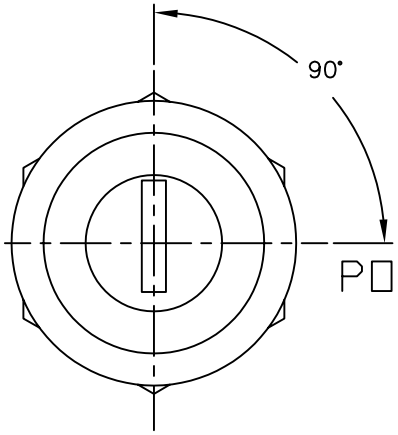

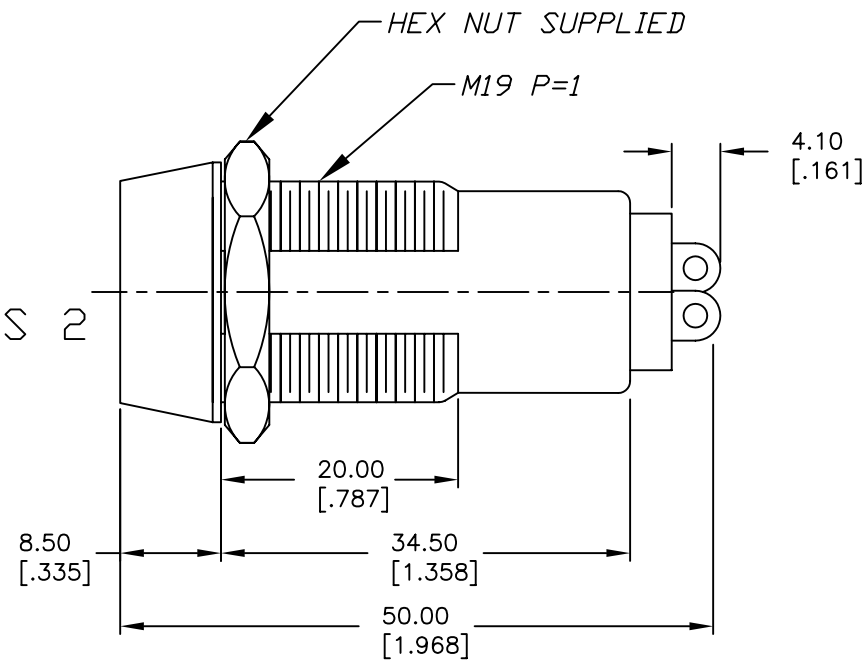

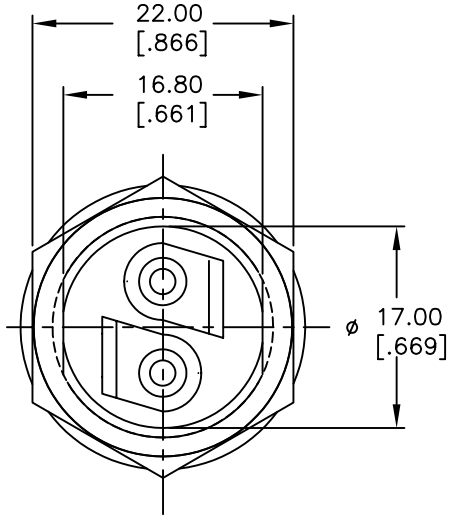

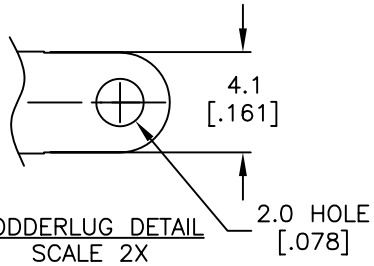

SODDERLUG DETAIL
SCALE 2X

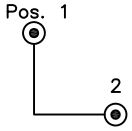

CIRCUIT: SPST
CONTACT CONFIGURATION

SWITCH FUNCTION	
POS 1	POS 2
↑	→
OFF	ON

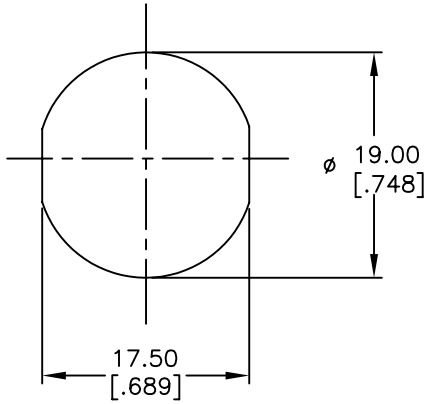

RECOMMENDED PANEL CUTOUT

NOTES:

1. ALL DIMENSIONS IN MM [INCH]
2. GENERAL TOLERANCE: X.X=±0.4
   X.XX=±0.25
3. TERM. NOS. FOR REFERENCE ONLY.
4. RATING: 4A @125VAC, 2A @250VAC
5. CONTACT RESISTANCE: 10mILLI-OHMS
6. DIELECTRIC STRENGTH: 1500 VAC-1Minute
7. INSULATION RESISTANCE: 500 Mega-OHMS
8. MATERIALS:
   HOUSING: ZINC ALLOY DIE CAST
   CYLINDER: ZINC ALLOY W/CHROME PLATING
   TERMINAL AND CONTACTS: SILVER PLATED
   TUMBLER: 5 DISC MECHANISM W/DUST SHUTTER
   KEYS 7325 (2): BRASS W/NICKEL PLATING
   DOUBLE CUT REVERSIBLE
9. 2002/95/EC (ROHS) COMPLIANT

LEGEND
● = INDICATE NO KEY PULL
⊙ = INDICATES KEY PULL POSSIBLE

REV.	ECN No.	DESCRIPTION	DATE	CHKD
C	16880	KEY PULL CORRECTED	1/17/2007	TN
B	16530	KEY PULL CORRECTED	10/16/2006	TN
A	11746	RELEASED FOR PRODUCTION	10/17/01	CJB

THE INFORMATION CONTAINED IN THIS DOCUMENT IS PROPRIETARY TO E-SWITCH AND IS NOT TO BE COPIED OR TRANSFERRED

E-SWITCH®

TITLE K0119B-7325

SCALE	DATE	DR	DWG	REV
1.5:1	1/17/2007	TN	K200119	C