SHEET OF

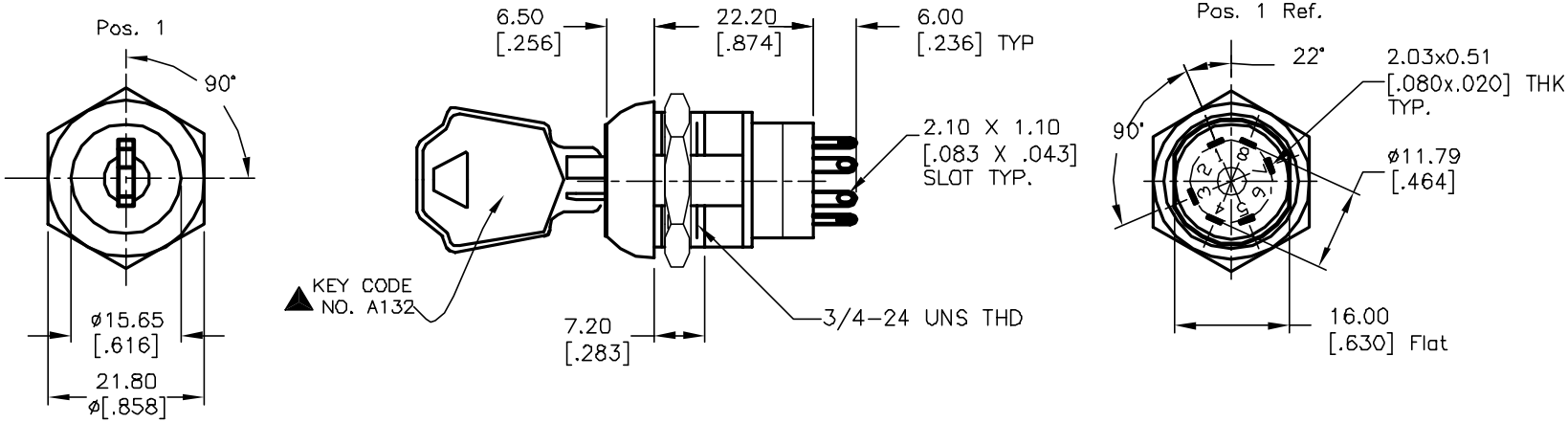

NOTES:

1. ALL DIMENSIONS IN MM [INCH]
2. GENERAL TOLERANCE: X.X=±0.4
   X.XX=±0.25
3. TERM. NOS. FOR REF. ONLY
4. CONTACT RATING: 4A @125VAC/28VDC, 2A @250VAC
5. DIELECTRIC STRENGTH: 1KV RMS min. at sea level
6. ELECTRICAL LIFE: 10,000 make-and-break cycles at full load.
7. MATERIALS:
   CONTACTS: Silver Plated CU (Q Contact material)
   TERMINALS: GOLD Plated Cu (Q Contact material)
   MOUNTING NUT: Nickel Plated zinc alloy
   CONTACT SPRING: Piano Wire
   KEYS (2): Brass with code no. A132
   LOCK: Bright NI plated zinc alloy with NI facing
   TUMBLER Mechanism: 4-disc tumbler cylinder.

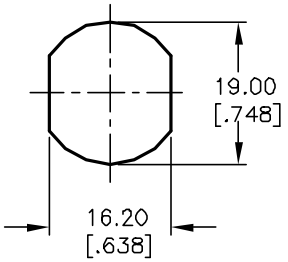

RECOMMENDED PANEL LAYOUT

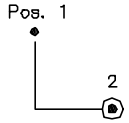

CIRCUIT: DP (90° INDEXING)
CONTACT CONFIGURATION

SWITCH FUNCTION	
CONNECTED TERMINAL #	
POS. 1	POS. 2
8-1, 4-5	1-3, 5-7

LEGEND
• =Detent Positions (45° or 90°)
⊙ =Key pull possible in these positions

REV.	ECN No.	DESCRIPTION	DATE	CHKD
B	11722	REVISED NOTES	10/10/01	CJB

THE INFORMATION CONTAINED IN THIS DOCUMENT IS PROPRIETARY TO E-SWITCH AND IS NOT TO BE COPIED OR TRANSFERRED

E-SWITCH®

TITLE K0130Q-A132

SCALE	DATE	DR	DWG	REV
1:1	10/10/01	CJB	K200246	B