SHEET OF

TOP VIEW -SHOW ORIENTATION OF LEGENDS
IN RESPECT TO THE PCB PIN TERMINALS.

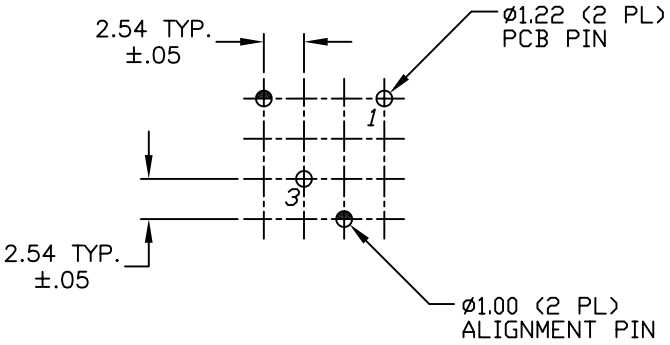

RECOMMENDED P.C.B. LAYOUT

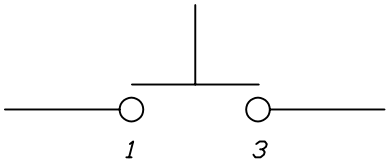

CIRCUIT: SPST
CONTACT CONFIGURATION

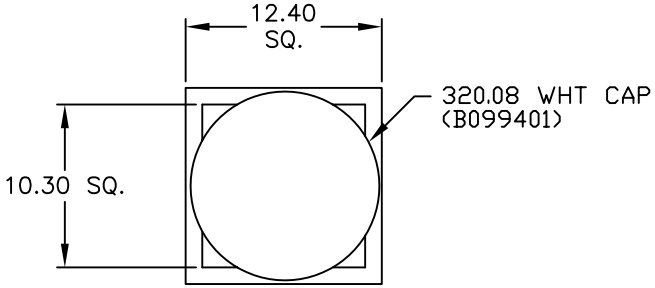

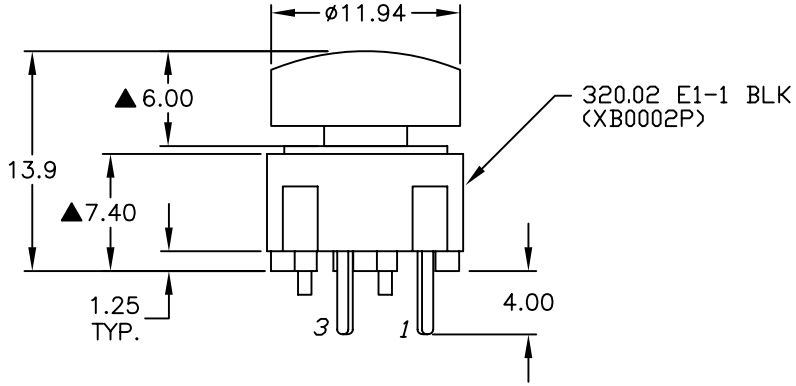

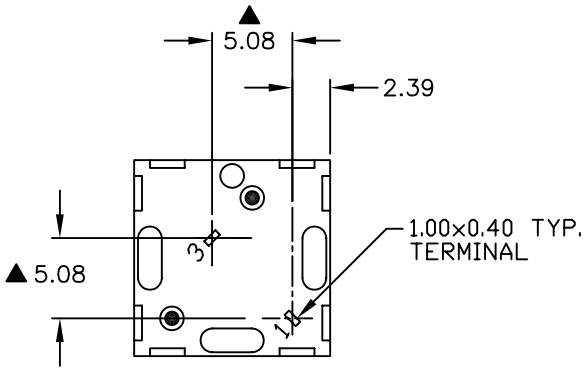

NOTES:
1. ALL DIMINSIONS IN MM
2. GENERAL TOLERANCE: X.X=±0.4
   X.XX=±0.25
3. RATING: 25mA, @50VDC
4. MECHANICAL LIFE: 1,000,000 CYCLES MIN
5. CONTACT RESISTANCE: 50mOHMS MAX
   INITIAL @ 2-4VDC, 100mA
6. INSULATION RESISTANCE: 1000 M OHMS MIN
7. DIELECTRIC STRENGTH: >500VAC RMS
   @ SEA LEVEL
8. ▲ DENOTES CRITICLE PARAMETER
9. 2002/95/EC (ROHS) COMPLIANT

REV.	ECN No.	DESCRIPTION	DATE	CHKD
A	16151	RELEASED FOR PRODUCTION	6/19/06	CT

THE INFORMATION CONTAINED IN THIS DOCUMENT
IS PROPRIETARY TO E-SWITCH AND IS
NOT TO BE COPIED OR TRANSFERRED

E-SWITCH®

TITLE 320.08E11WHT

SCALE	DATE	DR	DWG	REV
2:1	6/19/06	CT	XB0813A	A