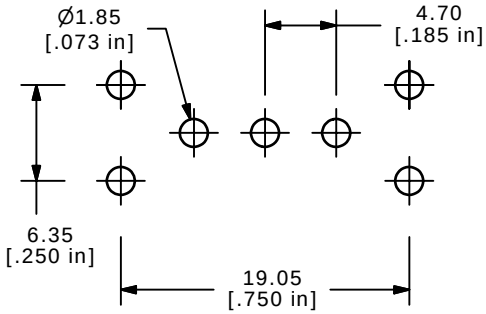

P.C. MOUNTING

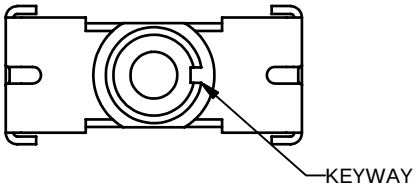

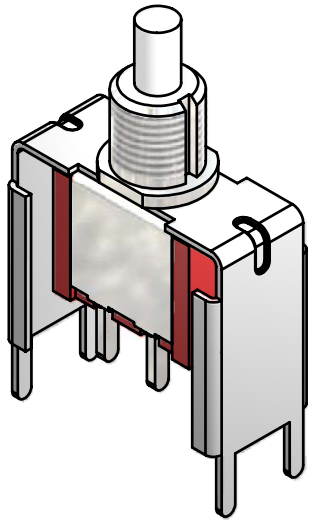

▲ SWITCH FUNCTION	
POS. 1	POS. 2
ON	(ON)
1-3	1-2

(ON)=MOMENTARY

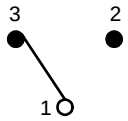

CIRCUIT: SPDT

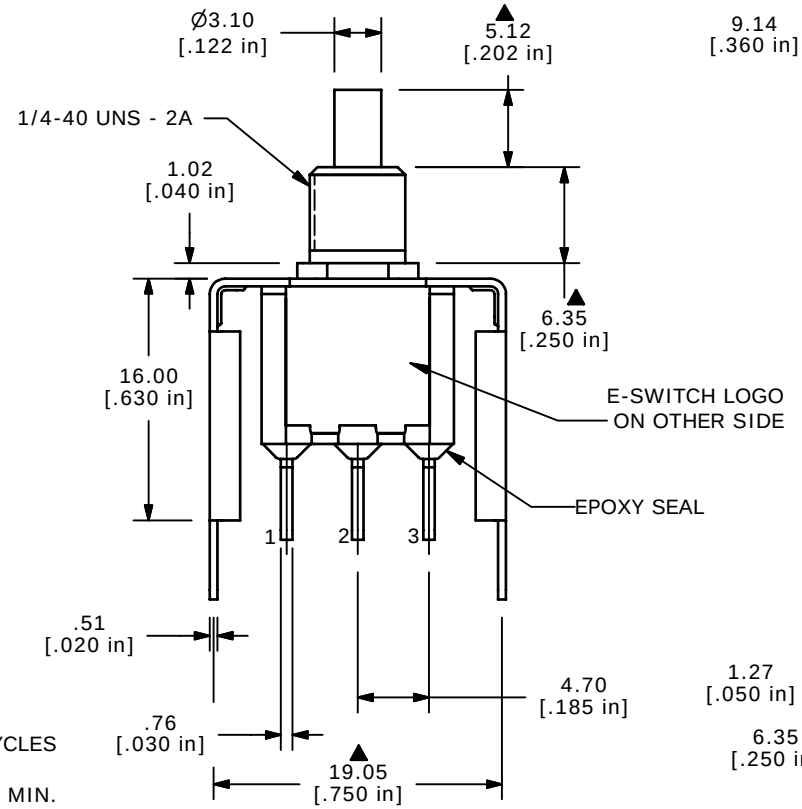

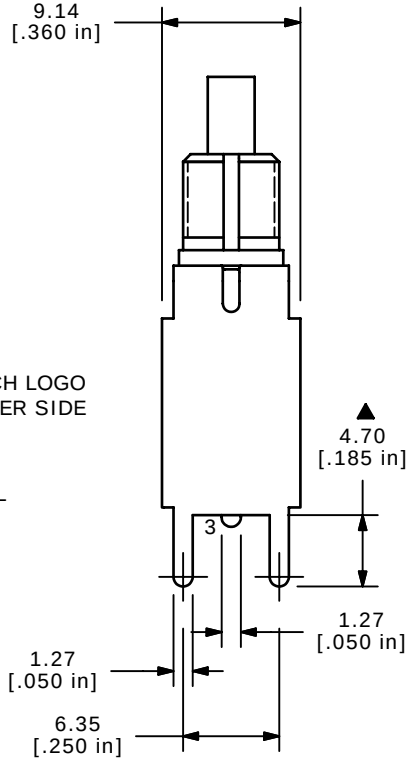

NOTE:
1. ALL DIMENSIONS IN MM [INCH]
2. GENERAL TOLERANCE: X.X=±0.4
   X.XX=±0.25
3. TERMINAL NUMBERS FOR REF ONLY
4. ▲ CONTACT MATERIAL: GOLD
5. RATING: 0.4VA @ 20 VAC OR VDC MAX.
6. ELECTRIC LIFE: 50,000 MAKE-AND-BREAK CYCLES AT FULL LOAD.
7. INSULATION RESISTANCE: 1,000 MEGA-OHM MIN.
8. DIELECTRIC STRENGTH: 1,000 V RMS @ SEA LEVEL.
9. OPERATING TEMP.: -30°C to 85°C
10. ▲ DENOTES CRITICAL PARAMETER.
11. 2002/95/EC (ROHS) COMPLIANT.

REV	PCR NO	DESCRIPTION	DATE	BY
C	16362	REDRAWN IN INVENTOR FORMAT	8/23/06	BO

THE INFORMATION CONTAINED IN THIS DOCUMENT IS PROPRIETARY TO E-SWITCH AND IS NOT TO BE COPIED OR TRANSFERRED

E-SWITCH®

TITLE 700SP7B10VS5RE

SCALE	DATE	DR	DWG	REV
2:1	8/23/2006	BO	T711052	C