SHEET OF

▲ PARTS LIST			
ITEM	QTY.	PART NO.	PART DESCRIPTION
1	1	F040016	D16 EE R12
2	1	F050405	50-004-05 (INCANDESCENT BULB)
3	1	F052105	50-001-05(WHT LENS TRANSPARENT)

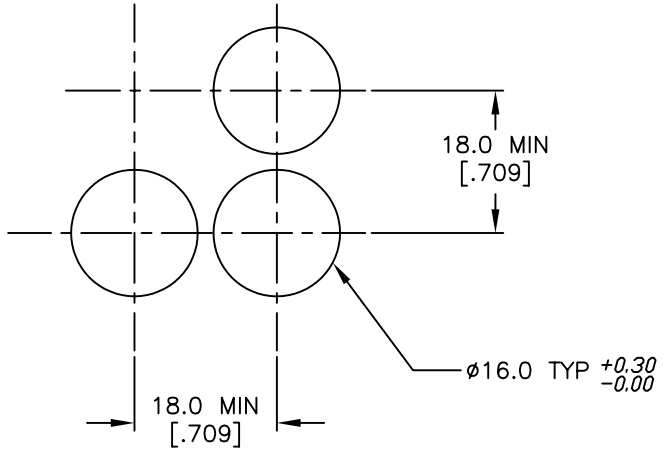

RECOMMEND PANEL MOUNTING

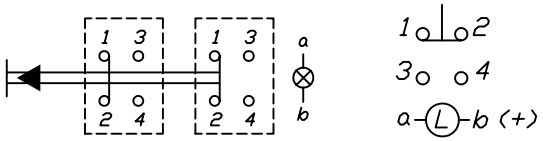

CIRCUIT: DPST

CONTACT CONFIGURATION

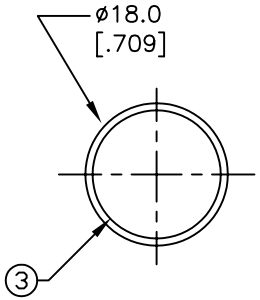

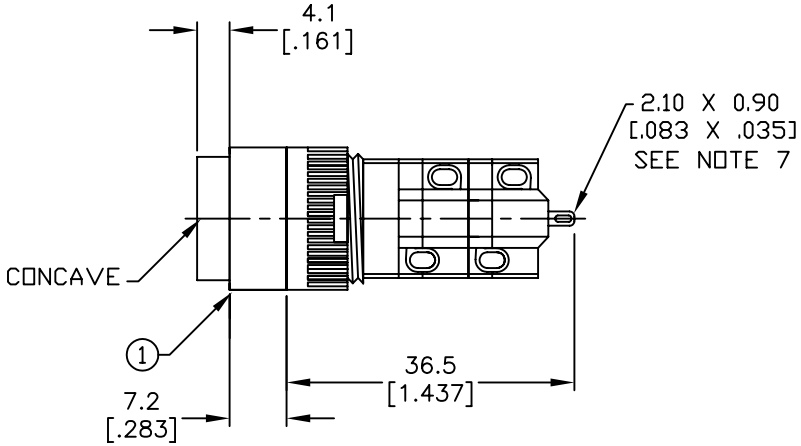

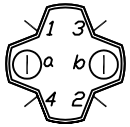

NOTES:

1. ALL DIMENSIONS IN MM [INCH]
2. GENERAL TOLERANCE: X.X=±0.4
   X.XX=±0.25
3. TERM. NOS. FOR REFERENCE ONLY.
4. RATING: 5A@250V AC / 8A@125V AC
5. MECHANICAL LIFETIME: 100,000 OPERATIONS
6. TRAVEL: 3.0MM
7. CONTACT MATERIAL: COPPER ALLOY W/SILVER PLATING
8. ▲ LAMP VOLTAGE: 28V AC 40mA
9. ▲ DENOTES CRITICAL PARAMETER

REV.	ECN No.	DESCRIPTION	DATE	CHKD
A	15178	NEW RELEASE	8/17/05	PV

THE INFORMATION CONTAINED IN THIS DOCUMENT IS PROPRIETARY TO E-SWITCH AND IS NOT TO BE COPIED OR TRANSFERRED

E-SWITCH®

TITLE				
D16 EE R12 C WHT				
SCALE 1.5:1	DATE 8/17/05	DR PV	DWG XF0357P	REV A