SHEET OF

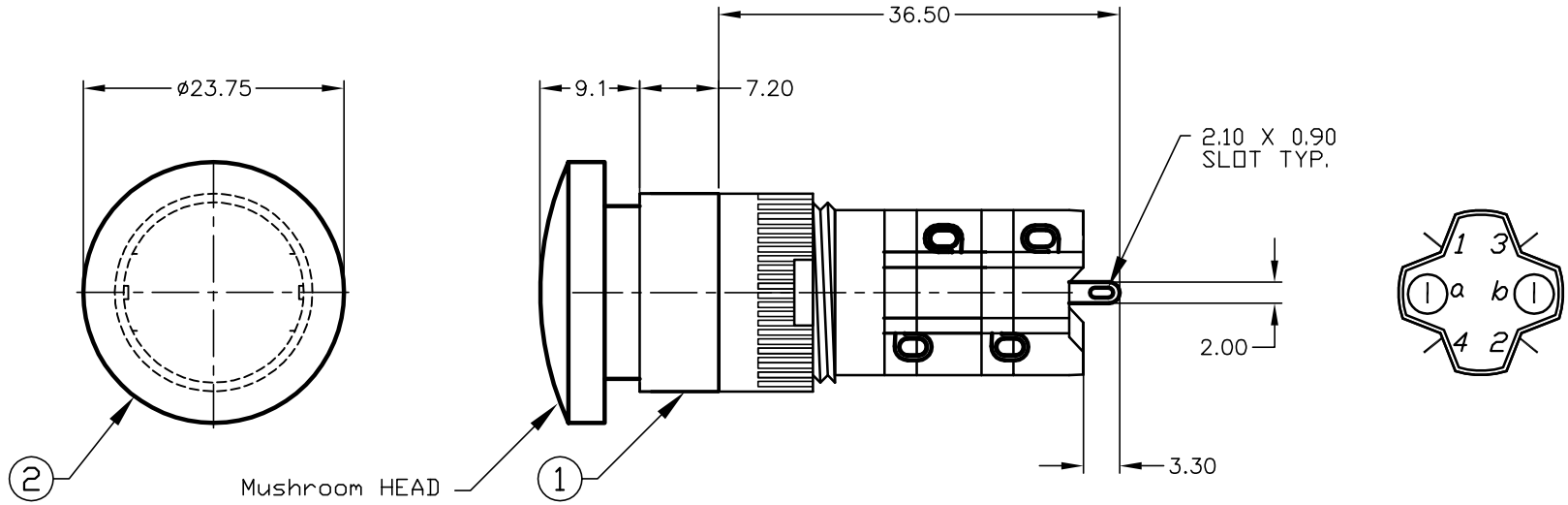

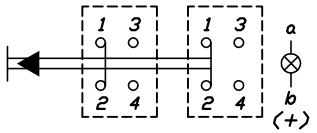

CIRCUIT: DPST

CONTACT CONFIGURATION

PARTS LIST			
ITEM	QTY.	PART NO.	PART DESCRIPTION
1	1	F040027	D16 OA R1 2
2	1	F051201	50-012-02 (Opaque GRN lens)

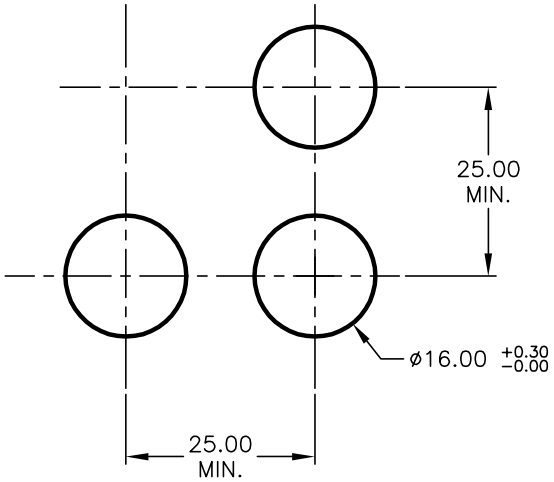

RECOMMENDED PANEL MOUNTING

SCALE 1:1

NOTES:

1. ALL DIMENSIONS IN MM [INCH]
2. GENERAL TOLERANCE: X.X=±0.4
   X.XX=±0.25
3. TERM. NOS. FOR REFERENCE ONLY.
4. RATING: 5A@250V AC / 8A@125V AC
5. MECHANICAL LIFETIME: >2 MILLION OPERATIONS
6. TRAVEL: 3.0MM
7. CONTACT MATERIAL: COPPER ALLOY W/SILVER PLATING

REV.	ECN No.	DESCRIPTION	DATE	CHKD
A	13982	RELEASE FOR PRODUCTION	5/4/04	AR

THE INFORMATION CONTAINED IN THIS DOCUMENT IS PROPRIETARY TO E-SWITCH AND IS NOT TO BE COPIED OR TRANSFERRED

E-SWITCH®

TITLE: D16 OA R2 0 GRN (Momentary)
MUSHROOM HEAD-OPAQUE LENS

SCALE	DATE	DR	DWG	REV
1.5:1	5/4/04	AR	XF0301P	A