SHEET OF

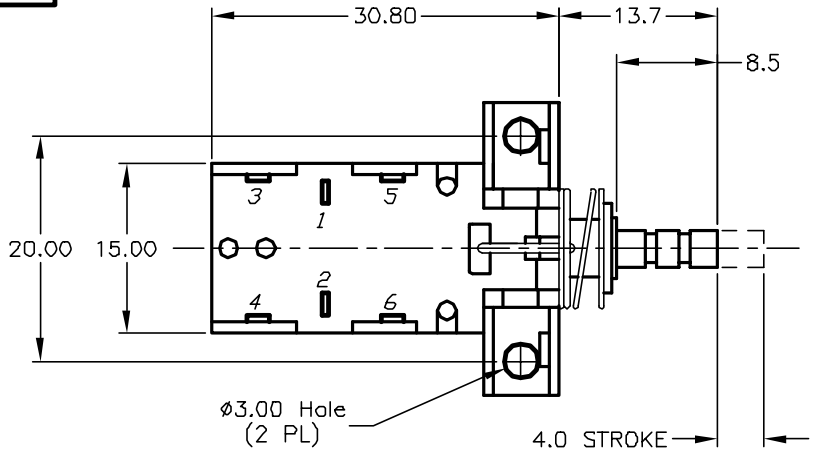

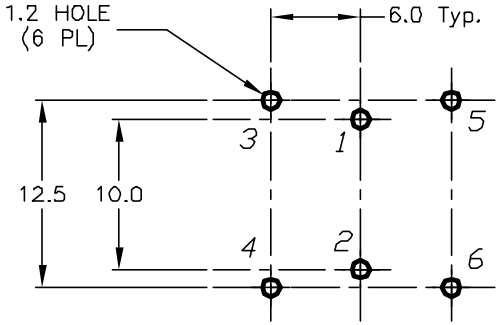

RECOMMEND P.C.B. LAYOUT
SCALE 2:1

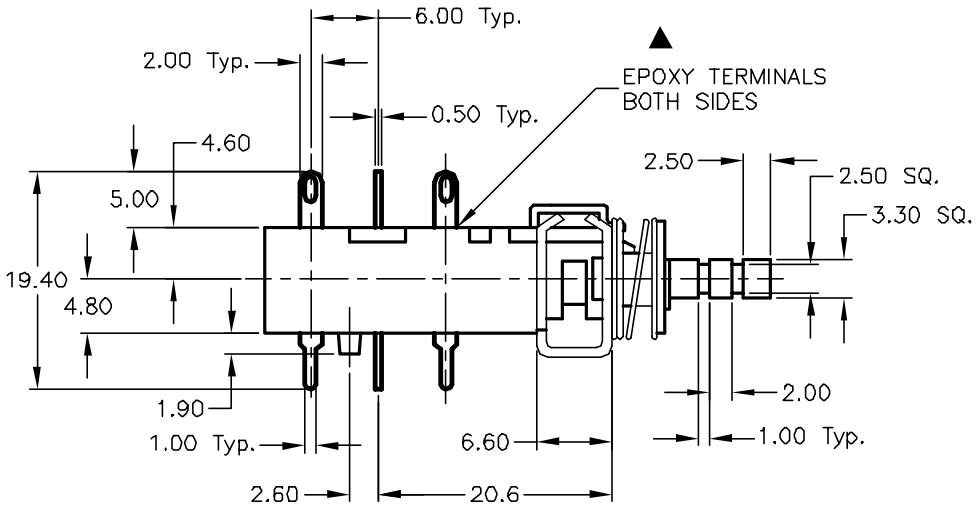

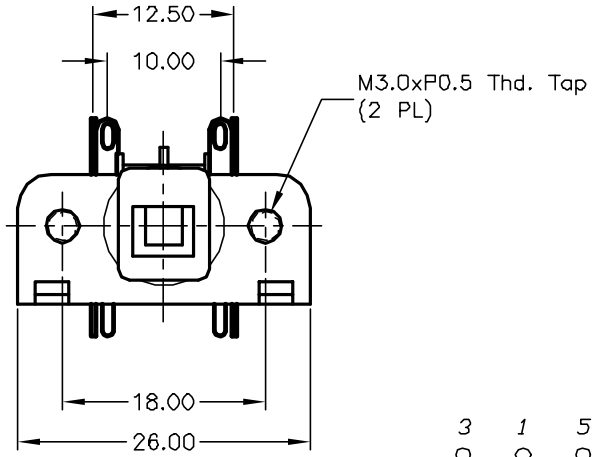

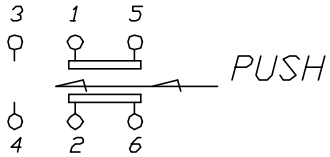

CIRCUIT: DPDT
CONATACT CONFIGURATION

NOTES:

1. ALL DIMENSIONS IN MM
2. GENERAL TOLERANCE: X.X=±0.4
   X.XX=±0.25
3. TERM. NOS. FOR REF. ONLY
4. RATING: AC 125V 7A, AC 250V 4A
5. CONTACT MATERIAL: Silver Plated Copper Alloy
6. CONTACT RESISTANCE: 20m ohm max. at 5V DC 1A.
7. DIELECTRIC STRENGTH: AC 1500V RMS
8. LIFE EXPECTANCY: Electrical: 6,000 cycle
9. OPERATING FORCE: 550±150gf
10. TRAVEL: Full: 5.5mm, Lock: 4.0mm

REV.	ECN No.	DESCRIPTION	DATE	CHKD
B	11766	REVISED PART DESCRIPTION	10/19/01	CB

THE INFORMATION CONTAINED IN THIS DOCUMENT IS PROPRIETARY TO E-SWITCH AND IS NOT TO BE COPIED OR TRANSFERRED

E-SWITCH®

TITLE				
P227 EE 2B 18A (LATCHING)				
SCALE	DATE	DR	DWG	REV
1.5:1	10/19/01	CB	P030104	B