SHEET OF

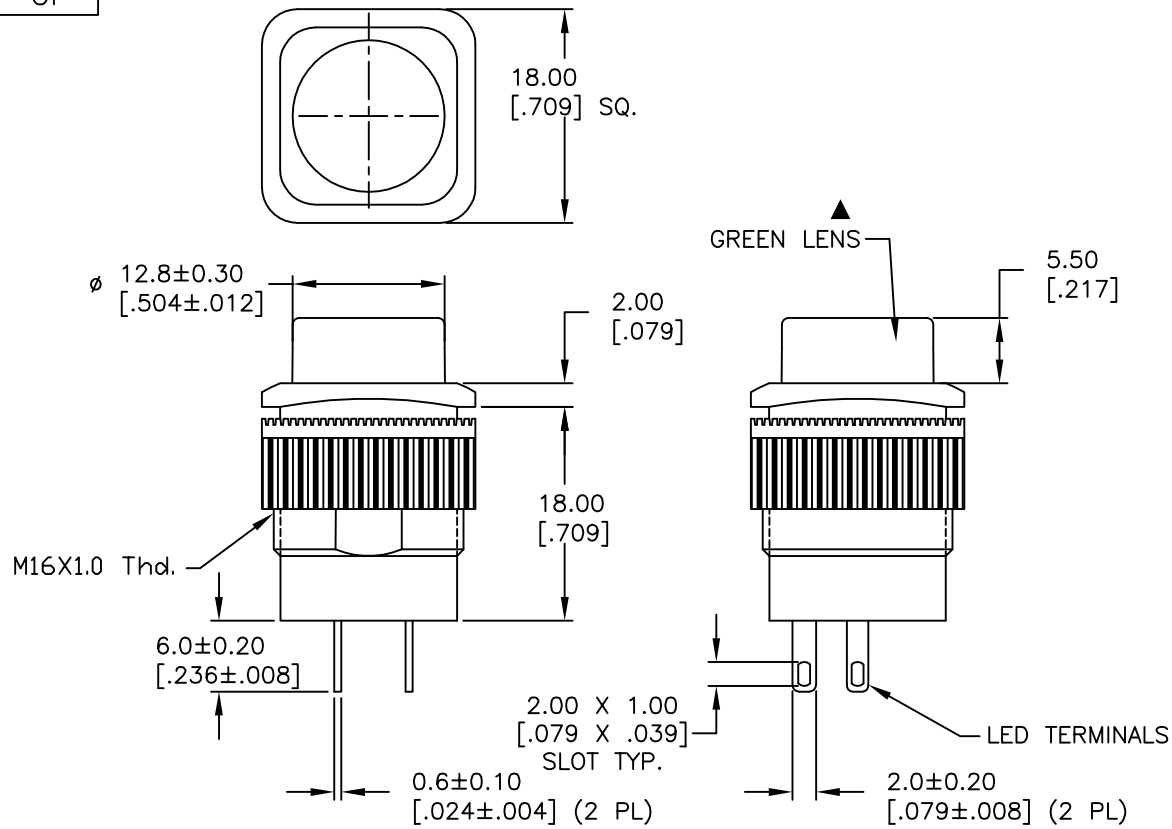

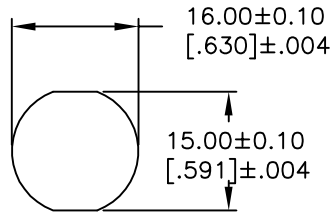

RECOMMENDED PANEL MOUNT
SCALE 1:1
7mm MAX THICKNESS

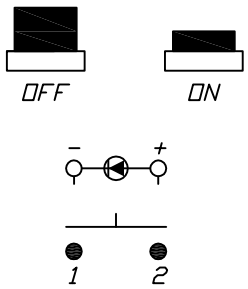

CIRCUIT: SPST

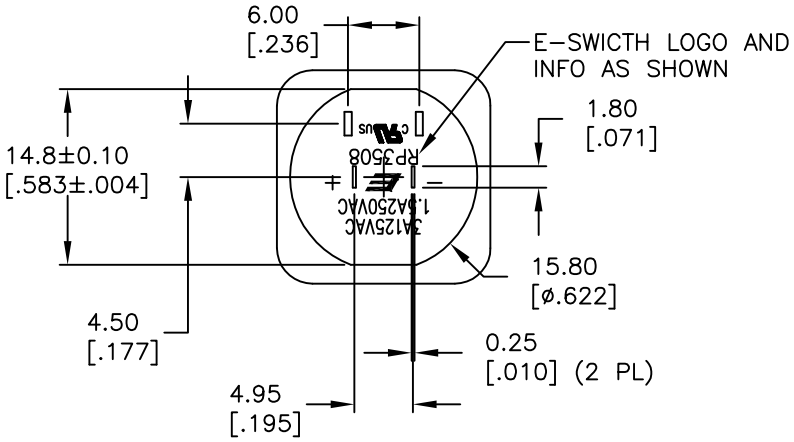

NOTES:
1. ALL DIMENSIONS IN MM [INCH]
2. GENERAL TOLERANCE: X.X=±0.4
   X.XX=±0.25
3. TERM. NOS. FOR REF. ONLY
▲4. RATING: 3A 125V, 1.5A 250V AC, UL & CUL APPROVED
5. CONTACT RESISTANCE: 50m ohm max.
6. INSULATION RESISTANCE: DC 500V 100Mega Ohm min.
7. DIELECTRIC STRENGTHS: AC 1500V 1 minute
8. LED: GREEN 3VDC
9. ▲ DENOTES CRITICAL PARAMETER.
10. 2002/95/EC (ROHS) COMPLAINT

REV.	ECN No.	DESCRIPTION	DATE	CHKD
C	17677	CHANGED ACTUATOR DIM TO 5.5	9/13/07	BF
B	14157	UPDATE DIMS, TITLE, ADD LOGO	7/9/04	AR
A	13213	RELEASED FOR PRODUCTION	6/13/03	AR

THE INFORMATION CONTAINED IN THIS DOCUMENT IS PROPRIETARY TO E-SWITCH AND IS NOT TO BE COPIED OR TRANSFERRED

E-SWITCH®

TITLE RP3508BBLKGRNGRNNS

SCALE	DATE	DR	DWG	REV
1.5:1	9/13/07	BF	F130414	C