NOTES:

1. ALL DIMENSIONS IN MM [INCH]
2. GENERAL TOLERANCE: X.X=±0.4
   X.XX=±0.25
3. TERM. NOS. FOR REFERENCE ONLY.
4. RATING: 7A@125V, 4A@250
   VUL,CUL, & VDE APPROVED
5. ▲ CONTACT MATERIAL:
   Terminals, Copper Alloy W/Silver plate.
   Contacts, Copper Alloy W/Tin Oxide
6. CONTACT RESISTANCE: 100milli-ohms TYP. MAX Initial
7. DIELECTRIC STRENGTH: 1500V for 1min
   3000V between poles
8. ELECTRICAL LIFE: 6,000 Cycles
9. OPERATING FORCE: 550±150gf TYP.
10. TRAVEL: FULL:5.5, LOCK:4.0
11. ▲ DENOTES CRITICAL PARAMETER.

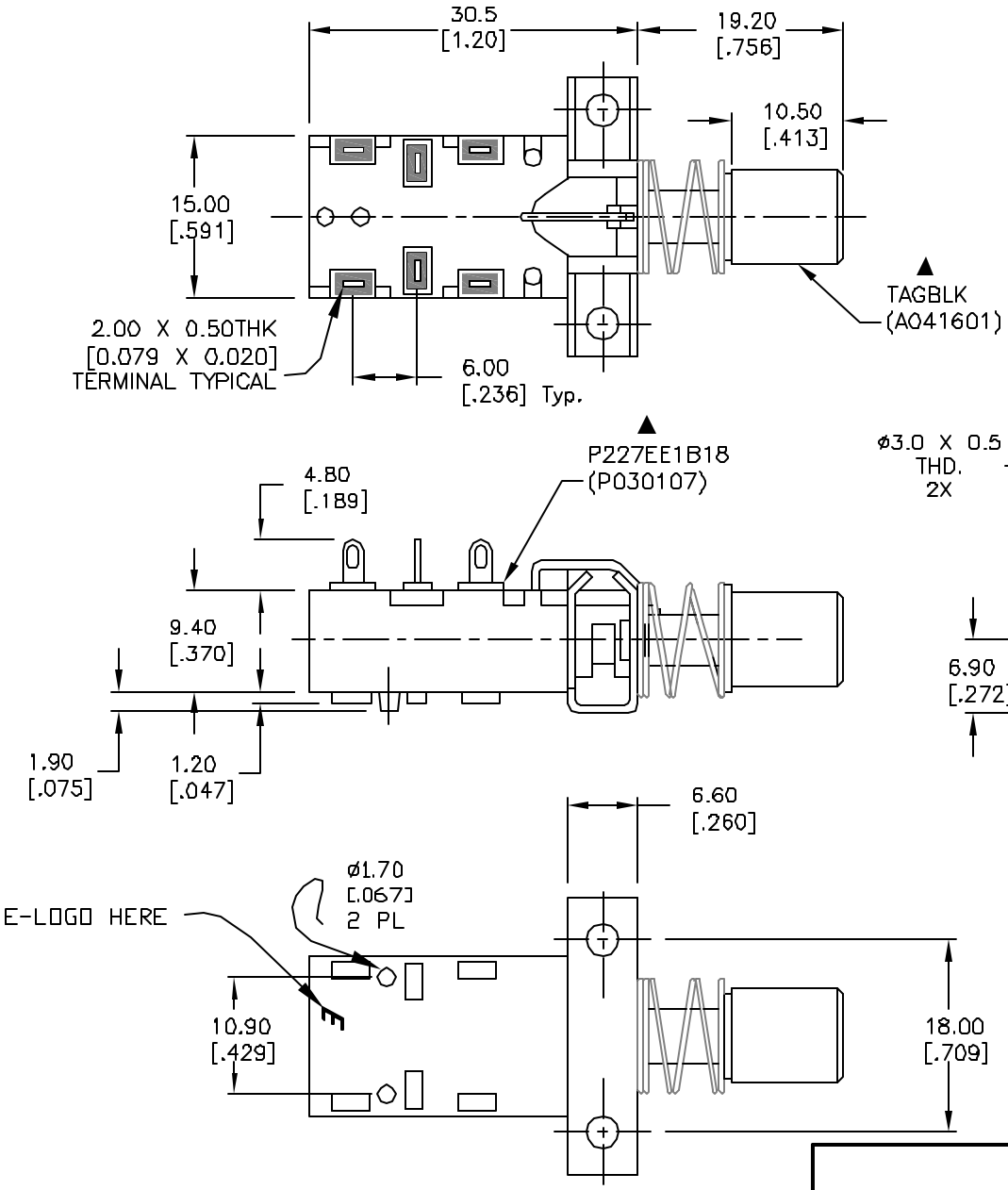

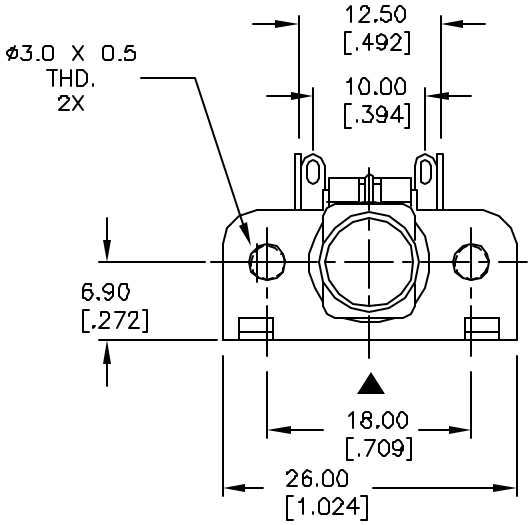

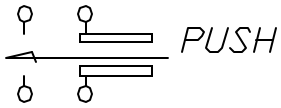

CIRCUIT: DPDT
CONATACT CONFIGURATION

REV.	ECN No.	DESCRIPTION	DATE	CHKD
A	13235	RELEASED FOR PRODUCTION	6/25/03	AR

THE INFORMATION CONTAINED IN THIS DOCUMENT IS PROPRIETARY TO E-SWITCH AND IS NOT TO BE COPIED OR TRANSFERRED

E-SWITCH®

TITLE				
P227EE1B18BTAGBLK				
SCALE 1.5:1	DATE 5/25/03	DR AR	DWG XP0259A	REV A