SHEET OF

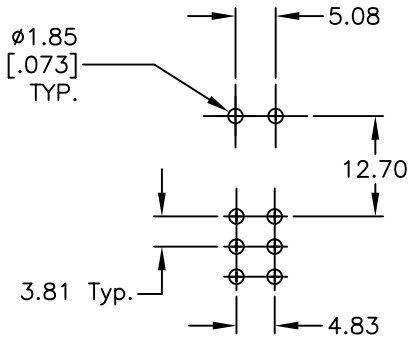

RECOMMENDED P.C.B. LAYOUT
NOT TO SCALE

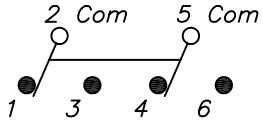

CIRCUIT: 2PDT

SWITCH FUNCTION		
POS. 1	POS. 2	POS. 3
ON	NONE	<ON>
2-3, 5-6	N/A	2-1, 5-4

NOTES: MOMENTATY=(ON)

NOTES:

1. ALL DIMENSIONS IN MM [INCH]
2. GENERAL TOLERANCE: X.X=±0.4
   X.XX=±0.25
3. TERM. NOS. FOR REFERENCE ONLY.
4. RATING: 5A @120V AC or 28VDC
   2A @250V AC
5. FIXED TERMINAL/MOVING CONTACT:
   COPPER ALLOY W/SILVER PLATING
6. ELECTRICAL LIFE: 30,000 make & break CYCLES @FULL LOAD.
7. INSULATION RESISTANCE: 1000MEGA-OHMS min.
8. DIELECTRIC STRENGTH: 1000V RMS@ SEA LEVEL
9. OPERATING TEMPERATURE: -30°C to +85°C
10. ROCKER MATERIAL: NYLON BLACK STD. (UL94HB)

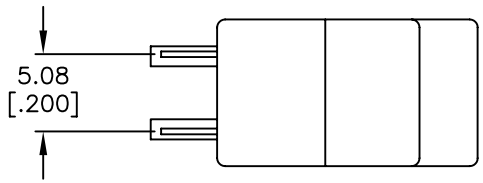

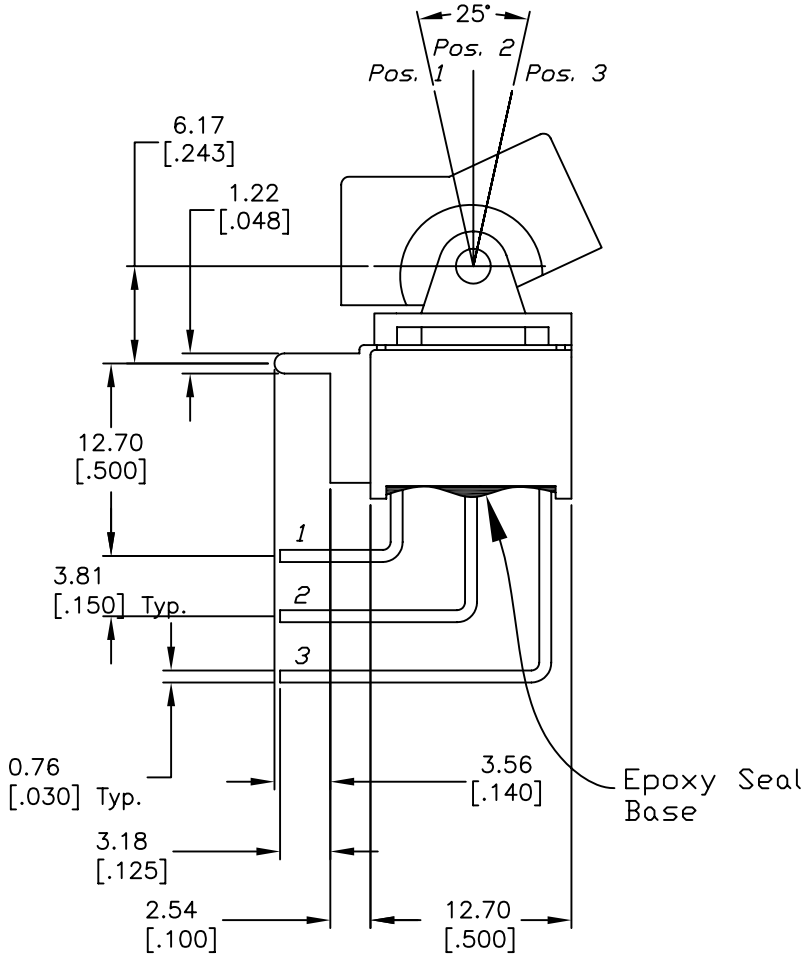

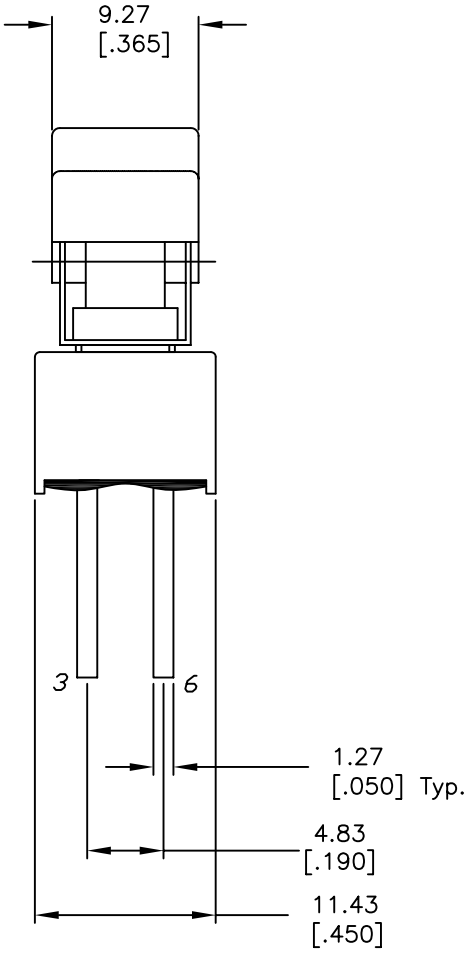

REV.	ECN No.	DESCRIPTION	DATE	CHKD
A	15176	RELEASED	8/22/05	PH

THE INFORMATION CONTAINED IN THIS DOCUMENT IS PROPRIETARY TO E-SWITCH AND IS NOT TO BE COPIED OR TRANSFERRED

E-SWITCH®

TITLE	SCALE	DATE	DR	DWG	REV
300A WDP-2 J1 BLK M7 RE	2:1	8/22/2005	PH	T301042	A