SHEET OF

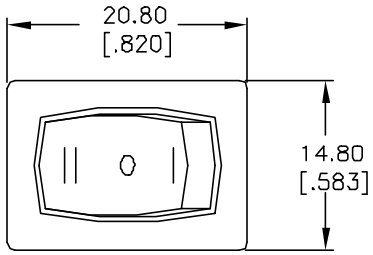

PANEL THICKNESS	X dimension
0.75-1.25 [.030-.049]	19.2 -0.1 [.756]
1.25-2.0 [.049-.079]	19.4 -0.1 [.764]
2.0-3.0 [.079-.118]	19.8 -0.1 [.780]

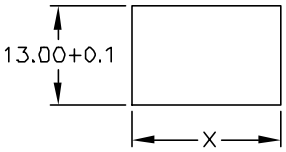

PANEL CUTOUT
NOT TO SCALE

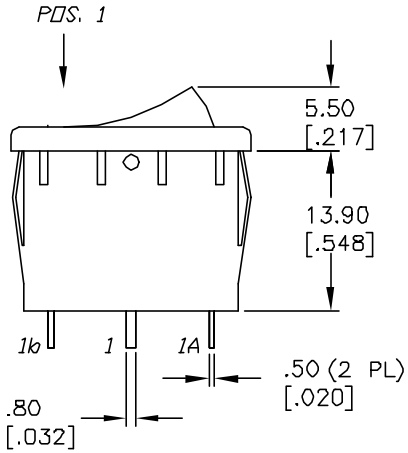

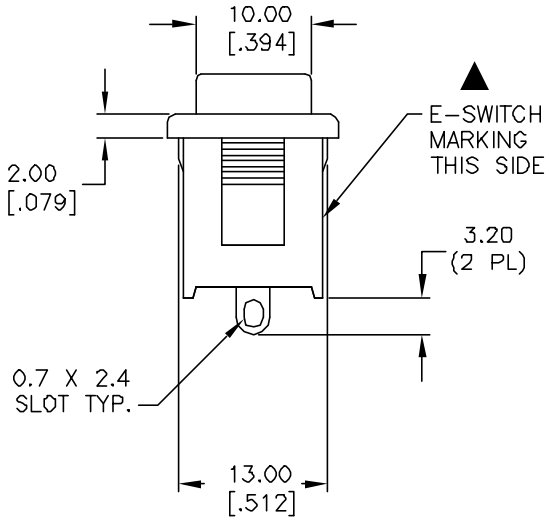

SWITCH FUNCTION		
POS. 1	POS. 2	POS. 2
ON	NONE	ON
1-1a	OPEN	1-1b

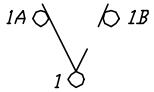

CIRCUIT: SPDT

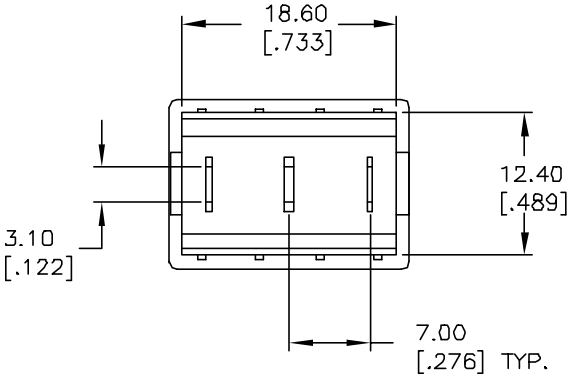

NOTES:
1. ALL DIMENSIONS IN MM [INCH]
2. GENERAL TOLERANCE: X.X=±0.4
   X.XX=±0.25
3. TERMINAL NOS. FOR REF ONLY.
4. RATING: 15A @ 125VAC OR
   6A @ 250VAC
5. MATERIALS: TERMINALS: Silver Plated Copper Alloy
   CONTACTS: Coin Silver, Silver Plated
6. ELECTRIC LIFE: 10,000 cycles
7. CONTACT RESISTANCE: <20 Mega Ω
8. INSULATION RESISTANCE: >1000 Mega Ω
9. DIELECTRIC STRENGTH: >1500 V 1 minute
   >3000 V between poles

REV.	ECN No.	DESCRIPTION	DATE	CHKD
A	11463	RELEASED FOR PRODUCTION	5/24/01	CJB

THE INFORMATION CONTAINED IN THIS DOCUMENT IS PROPRIETARY TO E-SWITCH AND IS NOT TO BE COPIED OR TRANSFERRED

E-SWITCH®

TITLE R1966C BLK BLK BS

SCALE	DATE	DR	DWG	REV
1.5:1	5/24/01	MM	M302208	A