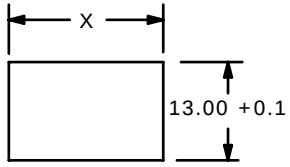

RECOMMENDED PANEL MOUNTING

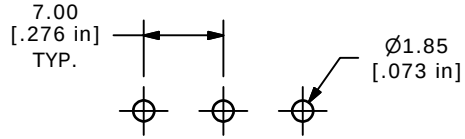

PC MOUNTING

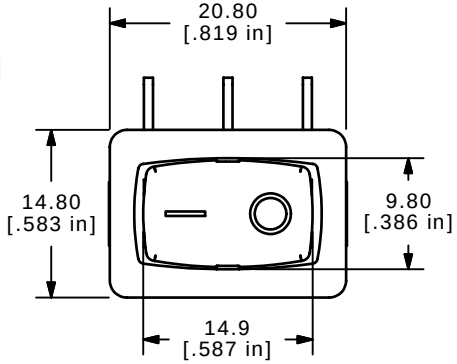

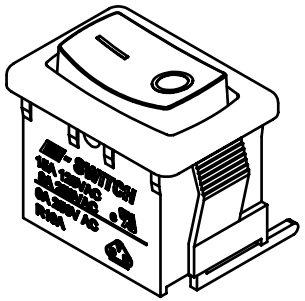

ISOMETRIC

PANEL THICKNESS	X
0.75-1.25	19.2
1.25-2.00	19.4
2.00-3.00	19.8

▲ SWITCH FUNCTION		
POS. 1	POS. 2	POS. 3
ON	OFF	ON
1a-1	OPEN	1-1b

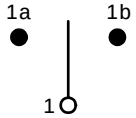

CURCUIT: SPDT

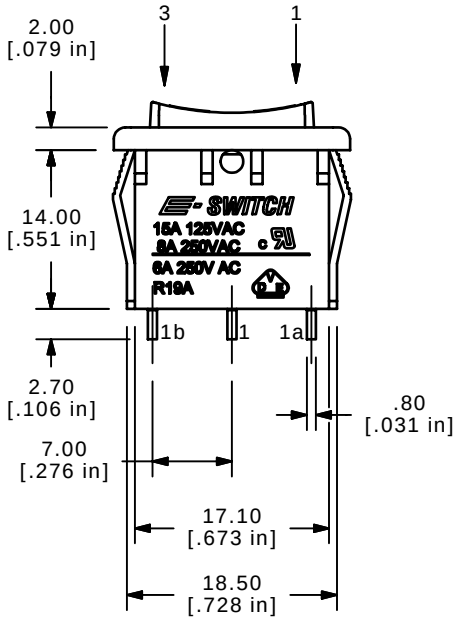

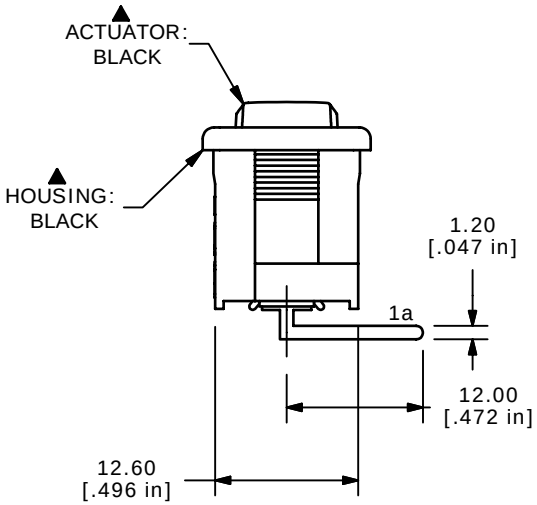

NOTES:
1. ALL DIMENSIONS IN MM [INCH]
2. GENERAL TOLERANCE: X.X=±0.4
   X.XX=±0.25
3. TERM. NOS. FOR REF. ONLY
4. RATING: 15A @125VAC;
   8A @250VAC.
5. ▲LAMP VOLTAGE: NO LAMP
6. MATERIAL:
   CONTACT SURFACE: COIN SILVER, SILVER PLATED.
   TERMINAL: COPPER ALLOY W/SILVER PLATE
7. ELECTRICAL LIFE: 10,000 CYCLES
8. CONTACT RESISTANCE: <20 MILLI-OHMS INITIAL
9. DIELECTRIC STRENGTH: >1,500V AC 1 MIN
10. ▲DENOTES CRITICAL PARAMETER.
11. 2002/95/EC (ROHS) COMPLIANT

REV	PCR NO	DESCRIPTION	DATE	BY
B	17095	ADDED TERM. NUMBERS	3/13/07	TN
A	14812	RELEASED FOR PRODUCTION	4/6/05	AR

THE INFORMATION CONTAINED IN THIS DOCUMENT IS PROPRIETARY TO E-SWITCH AND IS NOT TO BE COPIED OR TRANSFERRED

E-SWITCH™

TITLE R1966DBLKBLKFR

SCALE	DATE	DR	DWG	REV
1.5:1	3/13/2007	TN	M309315	B