SHEET OF

NOTES:
1. ALL DIMENSION IN MM [INCH]
2. GENERAL TOLERANCE: X.X=±0.4
   X.XX=±0.25
3. TERM. NOS. FOR REF. ONLY
4. CONTACT RATING SWITCHING: 150mA, 250V AC/DC
   350mA, 110V AC/DC
5. CONTACT RATING (NON-SWITCHING) 5A
6. CONTACT MATERIAL: SILVER over COPPER ALLOY.
7. OPERATING FORCE: 425±100 CM/STANDARD
8. OPERATING TEMP: -30° to 85°C
▲ 9. CIRCUIT SP: 7 POSITIONS, 30° INDEX.
10. DIELECTRIC STRENGTH 1000V RMS min.@ SEA LEVEL
▲ 11. DESIGNATE MAJOR DIMENSIONS
12. SUPPLIED HARDWARE: LOCK NUT AND WASHER (NOT SHOWN).

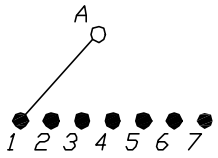

CONTACT CONFIGURATION
Timing: Non-Shorting (BBM)

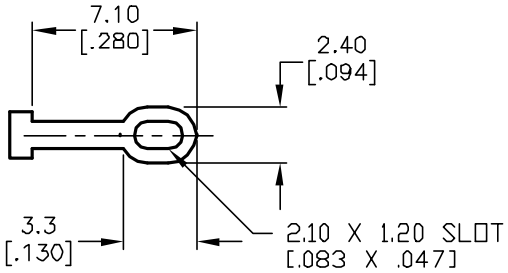

TERMINATION DETAIL
SCALE 2X

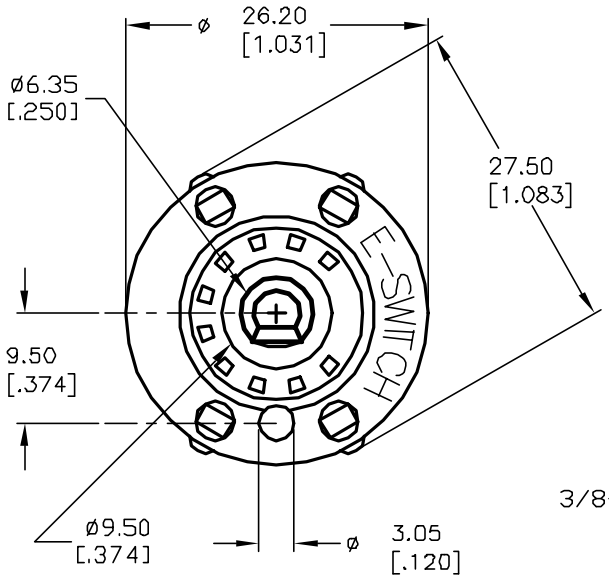

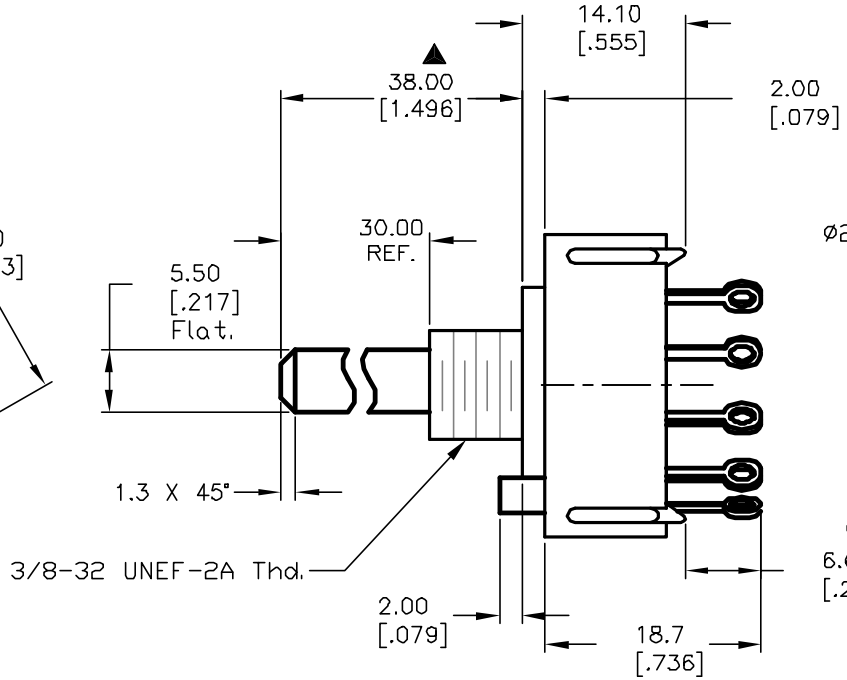

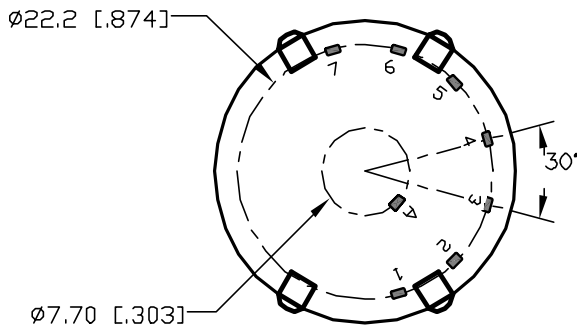

REV.	ECN No.	DESCRIPTION	DATE	CHKD
B	12633	REV DESC. PER NEW CATALOG	12/5/02	CJB

THE INFORMATION CONTAINED IN THIS DOCUMENT IS PROPRIETARY TO E-SWITCH AND IS NOT TO BE COPIED OR TRANSFERRED

E-SWITCH®

TITLE: KC-17-A (30.0mm) 01-N-L-S

SCALE	DATE	DR	DWG	REV
1.5:1	--	--	G527679	B