SHEET OF

NOTES:
1. ALL DIMENSION IN MM [INCH]
2. GENERAL TOLERANCE: X.X=±0.4
   X.XX=±0.25
3. TERM. NOS. FOR REF. ONLY
4. CONTACT RATING SWITCHING: 150mA, 250V AC/DC
   350mA, 110V AC/DC
5. CONTACT RATING (NON-SWITCHING) 5A
6. OPERATING FORCE: 425±100 CM/STANDARD
7. OPERATING TEMP: -30° to 85°C
▲ 8. CIRCUIT DP: 6 POSITIONS, 30° INDEX.
9. DIELECTRIC STRENGTH 1000V RMS min.@ SEA LEVEL
▲ 10. DESIGNATE MAJOR DIMENSIONS
11. HARDWARE SUPPLIED ON SWITCH- SEE BELOW
▲ STOPRING, LOCKWASHER, & HEXNUT

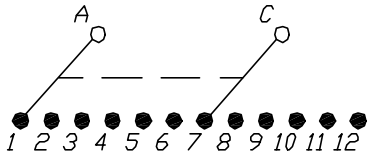

CONTACT CONFIGURATION
Timing: SHORTING

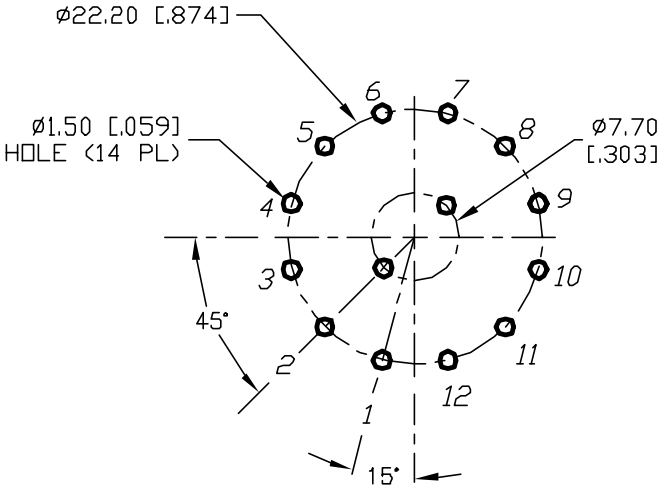

RECOMMENDED P.C.B. LAYOUT

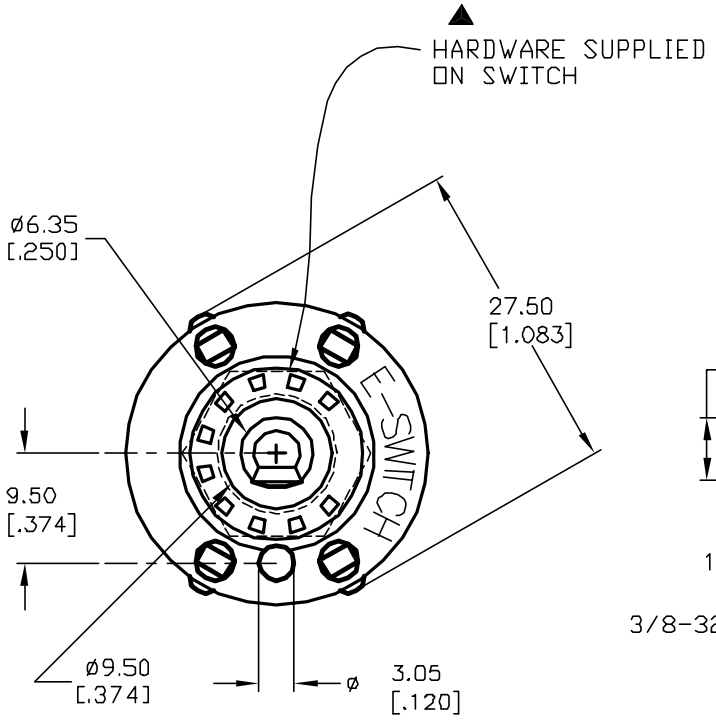

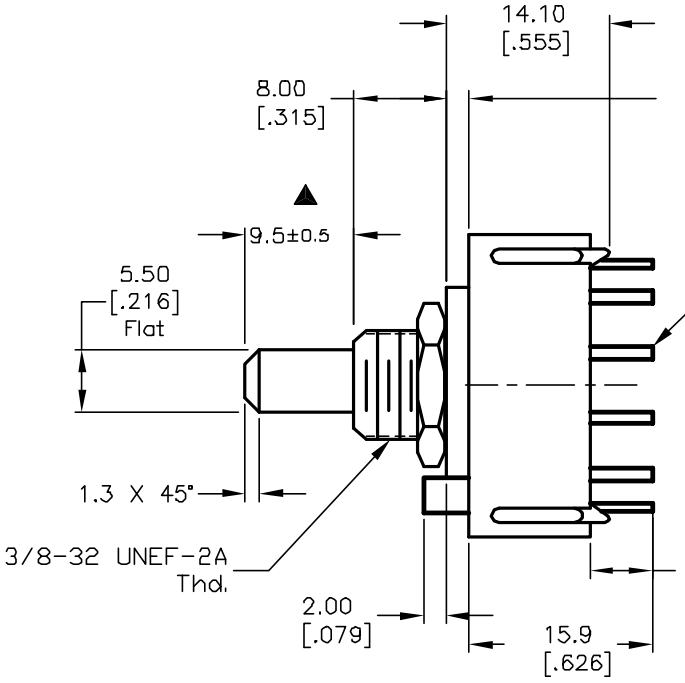

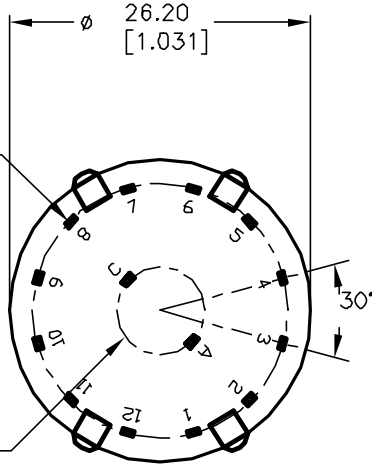

REV.	ECN No.	DESCRIPTION	DATE	CHKD
B	12821	REVISED NOTE 11	3/6/03	CJB
A	11276	RELEASED FOR PRODUCTION	3/5/01	CJB

THE INFORMATION CONTAINED IN THIS DOCUMENT IS PROPRIETARY TO E-SWITCH AND IS NOT TO BE COPIED OR TRANSFERRED

E-SWITCH®

TITLE: KC-26-A (9.5mm)-01-S-P-S

SCALE	DATE	DR	DWG	REV
1.5:1	3/5/01	CJB	G523760	B