SHEET OF

NOTES:
1. ALL DIMENSION IN MM [INCH]
2. GENERAL TOLERANCE: X.X=±0.4
   X.XX=±0.25
3. CONTACT RATING SWITCHING: 150mA, 250V AC/DC
   350mA, 110V AC/DC
▲ 4. CONTACT RATING (NON-SWITCHING) 5A
5. CONTACT: GOLD FLASH over Silver plated.
6. OPERATING FORCE: 425±100 CM/STANDARD
7. OPERATING TEMP: -30° to 85°C
▲ 8. CIRCUIT SP: 4 POSITIONS, 90° INDEX.
9. DIELECTRIC STRENGTH 1000V RMS min.@ SEA LEVEL
10. ▲ DESIGNATE MAJOR DIMENSIONS
▲11. HARDWARE SUPPLIED ON SWITCH- SEE BELOW
STOP RING, LOCKWASHER, & LOCKNUT

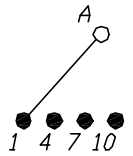

CONTACT CONFIGURATION
Timing: (BBM) Non-Shorting

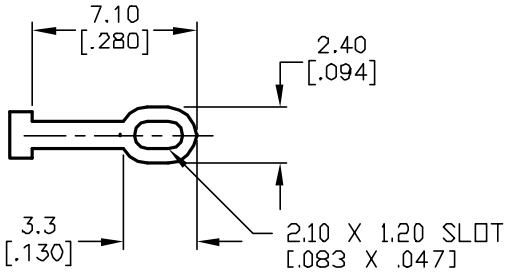

TERMINATION DETAIL
SCALE 2X

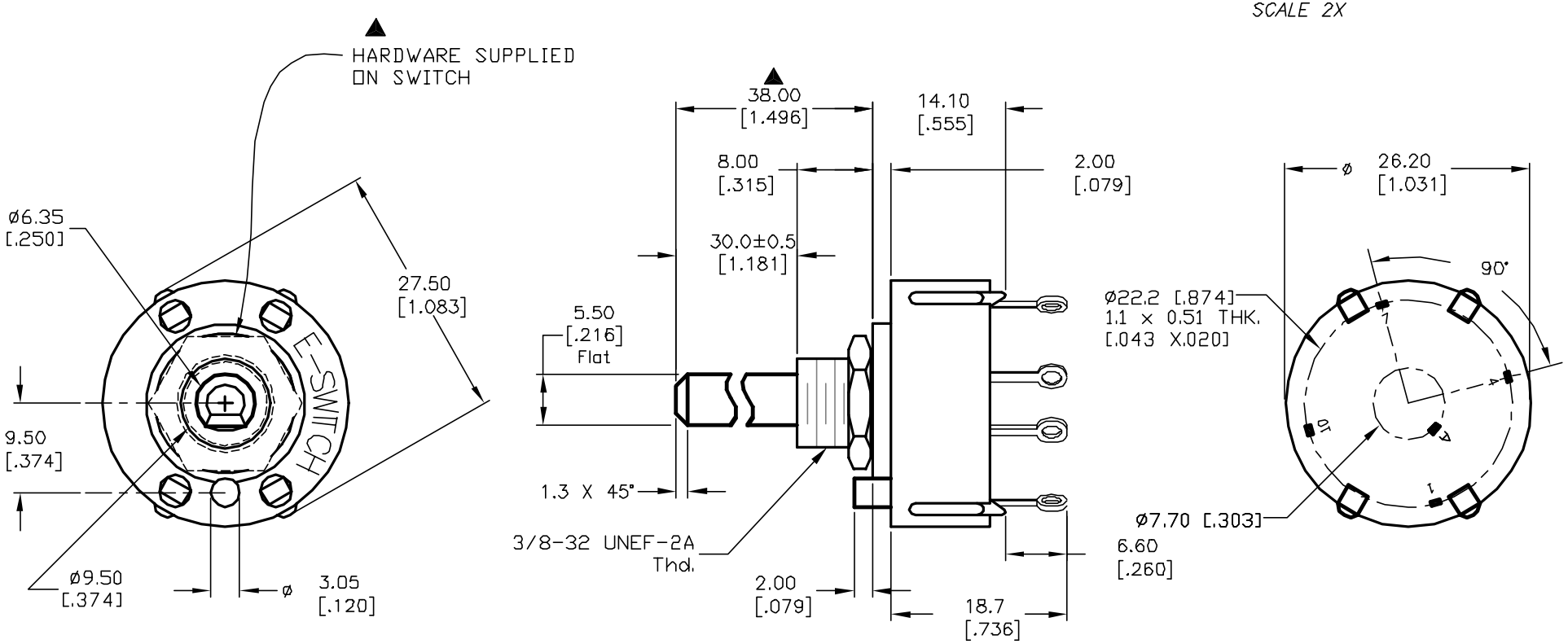

REV.	ECN No.	DESCRIPTION	DATE	CHKD
A	12821	RELEASED	2/25/03	CJB

THE INFORMATION CONTAINED IN THIS DOCUMENT IS PROPRIETARY TO E-SWITCH AND IS NOT TO BE COPIED OR TRANSFERRED

E-SWITCH®

TITLE KC-58-A (30.0mm)-01-N-L-F

SCALE	DATE	DR	DWG	REV
1.5:1	2/25/03	CJB	G510986	A