THIS DRAWING IS UNPUBLISHED. RELEASED FOR PUBLICATION -,- .
© COPYRIGHT - BY TYCO ELECTRONICS CORPORATION. ALL RIGHTS RESERVED.

LOC	DIST
AD	00

REVISIONS

P	LTR	DESCRIPTION	DATE	DWN	APVD
	A	ECO 05 006799	26APR06	BSV	SM

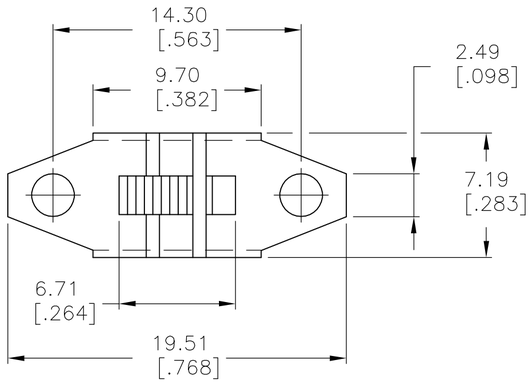

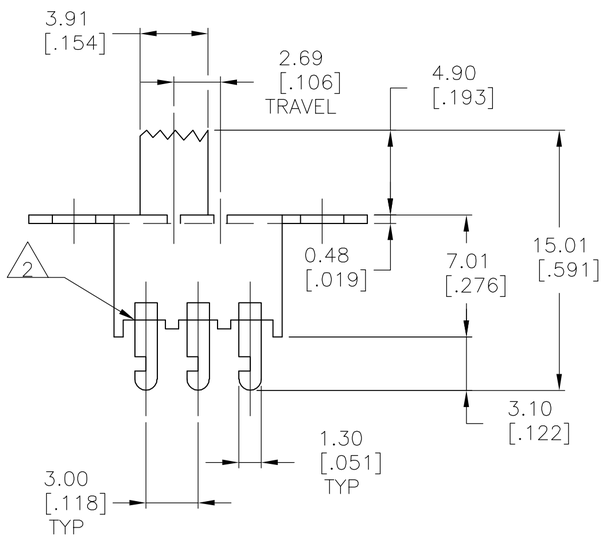

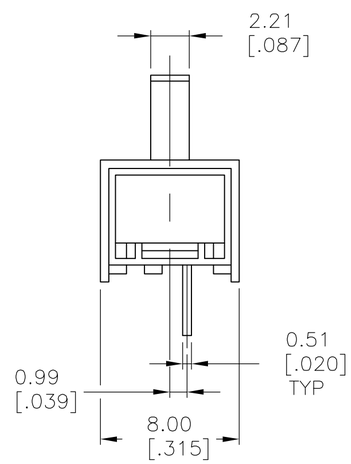

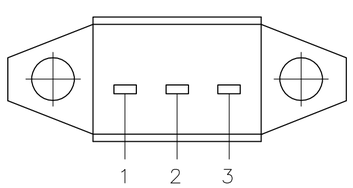

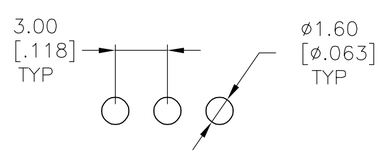

RECOMMENDED HOLE LAYOUT

SPECIFICATIONS:
BREAK–BEFORE–MAKE

MATERIALS:
FRAME–STEEL, ZINC PLATE
ACTUATOR–PBT G30, BLACK
FIXED CONTACT/TERMINAL–COPPER ALLOY, SILVER OVER NICKEL PLATE
MOVING CONTACT–COPPER ALLOY, SILVER OVER NICKEL PLATE
COIL SPRING–STEEL WIRE
LEAF SPRING–COPPER ALLOY
TERMINAL BOARD–PHENOLIC, UL94HB

ELECTRICAL:
CONTACT RATING– 500 MILLIAMPS@125V AC
CONTACT RESISTANCE– 30 MILLIOHMS MAX (INITIAL), 60 MILLIOHMS AFTER TEST
INSULATION RESISTANCE– 500 MEGOHMS MIN AT SEA LEVEL
DIELECTRIC STRENGTH– 500 VAC RMS AT SEA LEVEL
LIFE EXPECTANCY– 10,000 CYCLES MIN, NO LOAD & 6,000 MIN AT RATED CURRENT

MECHANICAL:
ACTUATION FORCE– 350±200 GRAMS
TRAVEL– .106 (2.69 MM)

ENVIRONMENTAL:
OPERATING TEMPERATURE– –20°C TO +85°C
STORAGE TEMPERATURE– –40°C TO +100°C
RESISTANCE TO SOLDER HEAT– 260°C FOR 10 SEC PER 109–202, CONDITION B
SOLDERABILITY– PER EIA–364–56A, PROCEDURE 3, CONDITION B

1. ALL MATERIALS AND FINISHES SHALL COMPLY WITH EU DIRECTIVE 2002/95/EC OF 27JAN2003 (ROHS).

2. ANTI SOLDER WICK SEAL.

3. ALL PERFORMANCE SPECIFICATIONS WERE TESTED IN ACCORDANCE WITH JIS–C–5441 UNLESS OTHERWISE STATED.

1825074

1–2	2–3	SLS12004	1825074–1
LEFT	RIGHT	ALCO PART NUMBER	TYCO PART NUMBER
ACTUATOR POSITION			

THIS DRAWING IS A CONTROLLED DOCUMENT.

DIMENSIONS: mm [INCHES]

TOLERANCES UNLESS OTHERWISE SPECIFIED:
0 PLC ± –
1 PLC ± –
2 PLC ± –
3 PLC ± .010 [0.25]
4 PLC ± –
ANGLES ± –

MATERIAL –
FINISH –

DWN BS VISWESWARA 01MAR05
CHK MS SARVER –
APVD – –
PRODUCT SPEC –
APPLICATION SPEC –
WEIGHT –

tyco Electronics
Tyco Electronics Corporation
Harrisburg, Pa 17105–3608

NAME
SLIDE SWITCH, (SLS–120)

SIZE	CAGE CODE	DRAWING NO	RESTRICTED TO
A2	00779	C–1825074	–

CUSTOMER DRAWING | SCALE 4:1 | SHEET 1 OF 1 | REV A