THIS DRAWING IS UNPUBLISHED. RELEASED FOR PUBLICATION -,- .
© COPYRIGHT - BY TYCO ELECTRONICS CORPORATION. ALL RIGHTS RESERVED.

LOC	DIST
AD	00

REVISIONS

P	LTR	DESCRIPTION	DATE	DWN	APVD
	A	ECO 05 006799	03MAY06	BSV	SM

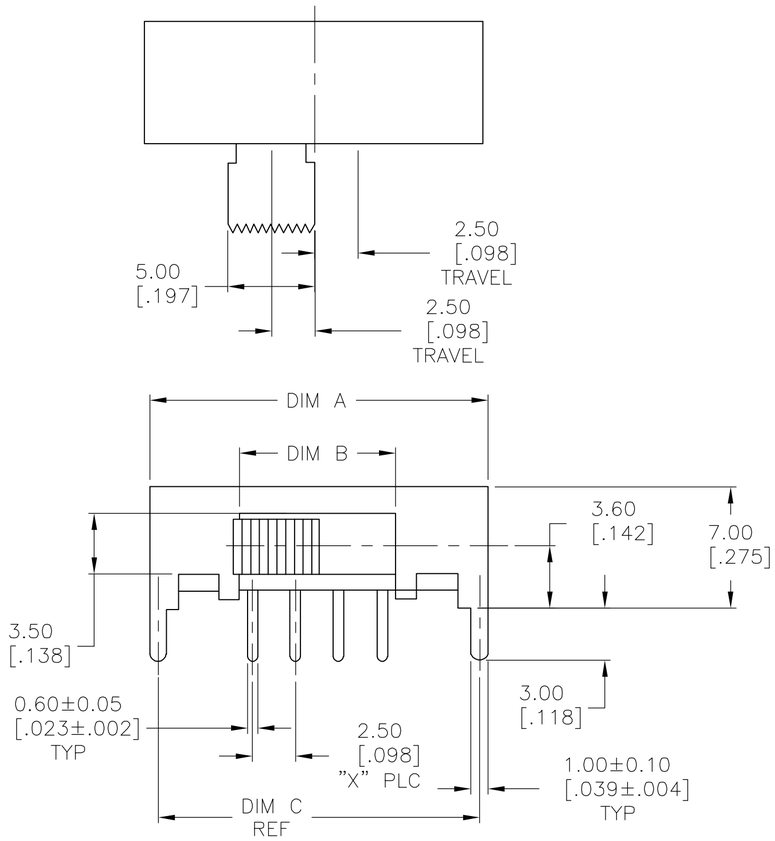

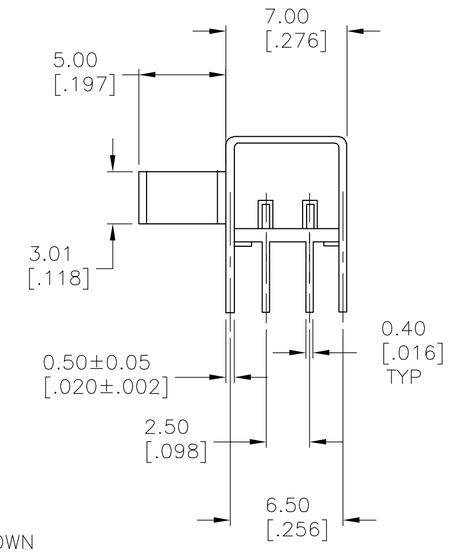

1825167-2 AS SHOWN

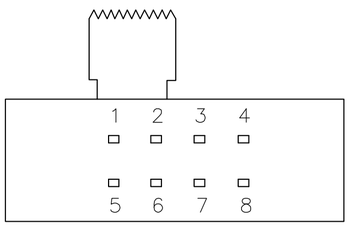

SPECIFICATIONS:
MAKE-BEFORE-BREAK

MATERIALS:
FRAME: STEEL, ZINC PLATE
ACTUATOR: POM UL94HB, BLACK
FIXED CONTACT/TERMINAL: COPPER ALLOY,
MOVING CONTACT: COPPER ALLOY, SILVER CLAD
COIL SPRING- TEMPERED STEEL WIRE
BALL- TEMPERED CARBON STEEL
TERMINAL BOARD- PHENOLIC, UL94HB
TERMINAL SEAL- EPOXY

ELECTRICAL:
CONTACT RATING-250 MILLIAMPS@125V AC
CONTACT RESISTANCE-30 MILLIOHMS MAX (INITIAL), 60 MILLIOHMS AFTER TEST
INSULATION RESISTANCE-500 MEGOHMS MIN AT 500V DC
DIELECTRIC STRENGTH-500 VAC RMS AT SEA LEVEL
LIFE EXPECTANCY-10,000 CYCLES MIN. NO LOAD

MECHANICAL:
ACTUATION FORCE-250 +150/-100 GRAMS
TRAVEL-.098 (2.49MM)

ENVIRONMENTAL:
OPERATING TEMPERATURE- -10° C TO +60° C
STORAGE TEMPERATURE- -10° C TO +60° C
RESISTANCE TO SOLDER HEAT- 260° C FOR 10 SEC PER 109-202, COND. B
SOLDERABILITY- PER EIA-364-56A, PROCEDURE 3, COND. B

NOTES:
1. ALL MATERIALS AND FINISHES SHALL COMPLY WITH EU DIRECTIVE 2002/95/EC OF 27JAN2003 (ROHS)
2. ALL PERFORMANCE SPECIFICATIONS WERE TESTED IN ACCORDANCE WITH JIS-C-5441 UNLESS OTHERWISE STATED.

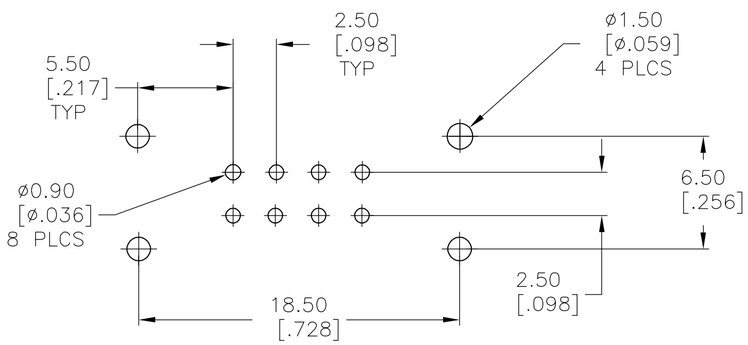

P.B.B HOLES LAYOUT

(HOLE LAYOUT TOL ±0.05[.002] ON ALL DIMENSIONS)

1-2 5-6	2-3 6-7	3-4 7-8	-	-	1 2 3 4 / 5 6 7 8	3	.728	.354	.768	DP3T	STSA230RA104	1825167-2
-	-	-	1-2 4-5	2-3 5-6	1 2 3 / 4 5 6	2	.630	.256	.669	DPDT	STSA220RA104	1825167-1
FUNCTION DIAGRAM					BOTTOM VIEW	X PLC	DIM C	DIM B	DIM A	FUNCTION	T&B P/N	TYCO P/N

THIS DRAWING IS A CONTROLLED DOCUMENT.

DIMENSIONS: mm [INCHES]

TOLERANCES UNLESS OTHERWISE SPECIFIED:
0 PLC ± -
1 PLC ± -
2 PLC ± -
3 PLC ± 0.25[.010]
4 PLC ± -
ANGLES ± -

MATERIAL: SEE NOTES
FINISH: SEE NOTES

DWN B.S.VISWESWARA 18MAR05
CHK M.S.SARVER -
APVD - -
PRODUCT SPEC -
APPLICATION SPEC -
WEIGHT -

tyco Electronics
Tyco Electronics Corporation
Harrisburg, Pa 17105-3608

NAME: SLIDE SWITCH, STSA220RA104 & STSA230RA1 SERIES

SIZE	CAGE CODE	DRAWING NO	RESTRICTED TO
A2	00779	C-1825167	-

CUSTOMER DRAWING | SCALE 4:1 | SHEET 1 OF 1 | REV A

1825167