SHEET OF

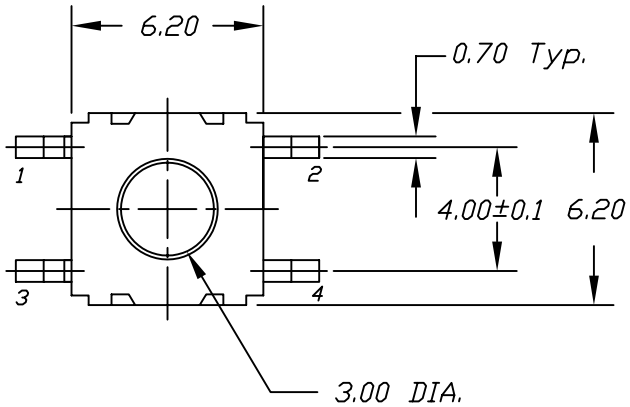

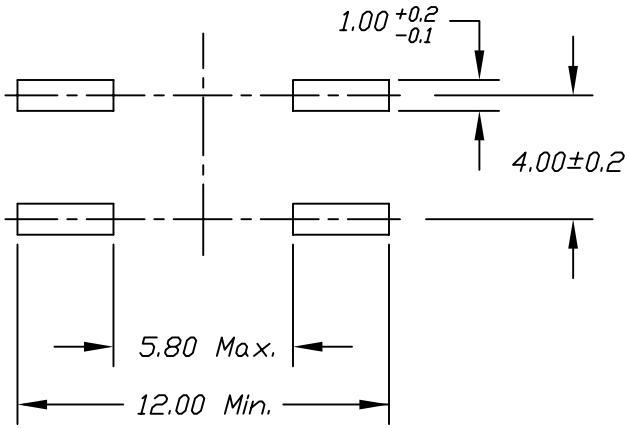

RECOMMEND P.C.B. LAND DIMENSIONS

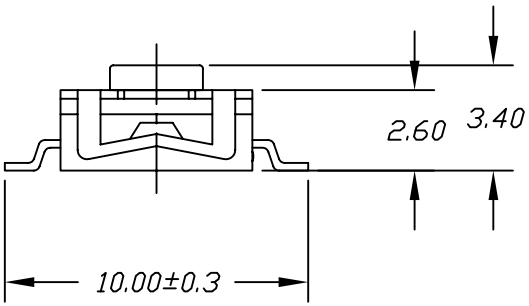

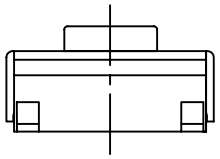

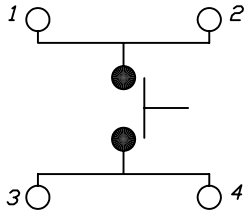

CIRCUIT: SPST
CONTACT CONFIGURATION

NOTES:

1. ALL DIMENSIONS IN MM
2. TERM. NOS. FOR REF ONLY
3. RATING: 50mA, 12V DC
4. TRAVEL: 0.25 ± .1mm
5. CONTACT RESISTANCE: 100m Ohms Max.
6. MECHANICAL/ELECTRICAL LIFE: 100,000 CYCLES.
7. CONTACT MATERIAL: SILVER
8. PACKAGE: TAPE AND REEL, 1,500 PIECES.
9. 2002/95/EC (ROHS) COMPLIANT.
10. OPERATING FORCE: 160 ± 50gf.
11. OPERATING TEMP: -20C TO 70C

REV.	DESCRIPTION	DATE	CHKD
C	ADDED OPERATING TEMP NOTE	1/9/07	TN
B	UPDATED NOTES	11/15/06	TN
A	RELEASED FOR PRODUCTION		

THE INFORMATION CONTAINED IN THIS DOCUMENT IS PROPRIETARY TO E-SWITCH AND IS NOT TO BE COPIED OR TRANSFERRED

TOLERANCES ±0.4 ±0.25 0.0 0.00

E-SWITCH®

TITLE TL3304AF160QG

SCALE	DATE	DR	DWG	REV
4:1	1/9/2007	TN	P010538	C