SERIES TL 3330 SWITCHES

TACT SWITCHES SMT - RIGHT ANGLE

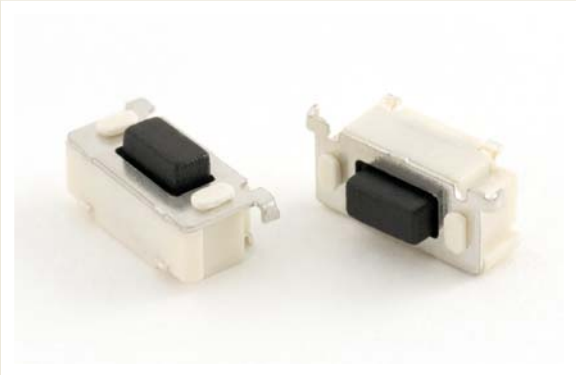

SPECIFICATIONS

Contact Rating:	50mA @ 12 VDC
Life Expectancy:	50,000 cycles-F130 30,000 cycles-F260
Contact Resistance:	100mΩ
Insulation Resistance:	100MΩ
Dielectric Strength:	250 VAC
Actuation Force:	130± 40 gf, 260± 50 gf
Operating Temperature:	-20°C to 70°C
Travel:	0.25mm ± 0.15mm

FEATURES & BENEFITS

- Multiple gram force options
- Small profile works great for many consumer electronic applications

APPLICATIONS/MARKETS

- Telecommunications
- Consumer Electronics
- Audio/visual
- Medical
- Testing/instrumentation
- Computer/servers/peripherals

MATERIALS

Actuator:	Nylon
Base:	Nylon
Cover:	Tin Plate
Terminals:	Copper alloy, plated

HOW TO ORDER

SERIES	MODEL NO.	ACTUATOR ("L" Dimension)	OPERATING FORCE	CONTACT MATERIAL	TERMINATION
TL	3330	A = 3.50mm	F130 F260	Q = Silver	G = Gull Wing

Example Ordering Number

TL–3330–A–F260–Q–G

Specifications subject to change without notice.

TL 3330

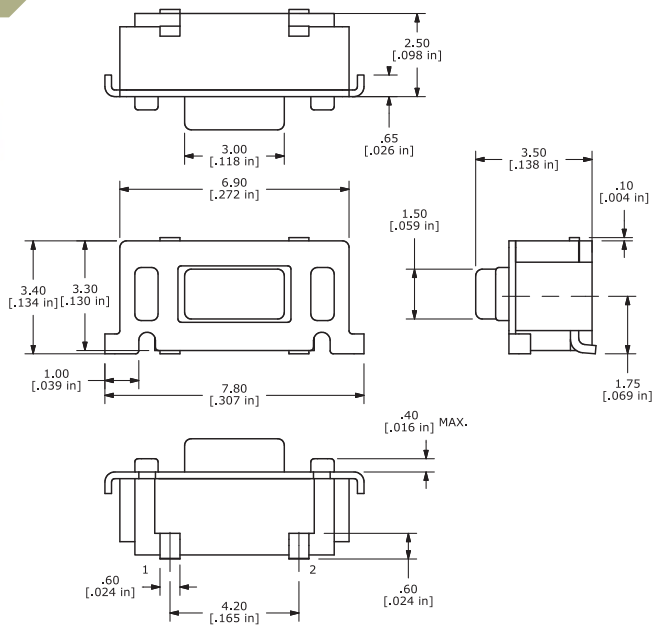

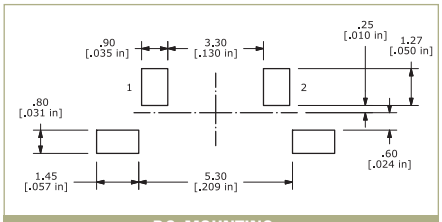

P.C. MOUNTING

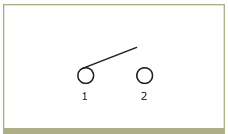

SCHEMATIC

E•SWITCH®
Phone: 800-867-2717
Fax: 763-531-8235