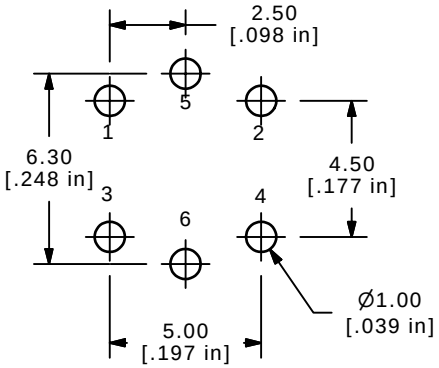

P.C.B LAYOUT

LED SPECS	UNITS	YELLOW
FORWARD CURRENT	mA	30
FORWARD VOLTAGE @20mA	V	2.2-2.7
LUMINOUS INTENSITY @ 10mA	MCD	200

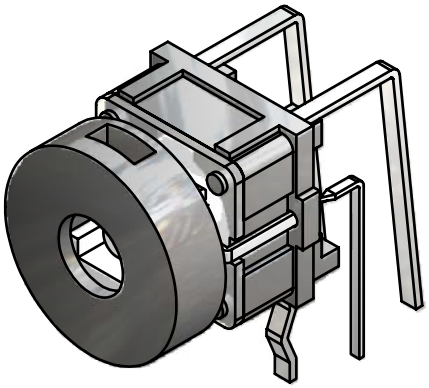

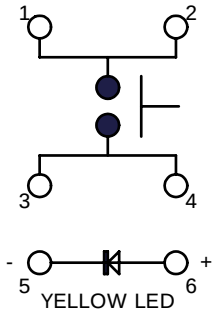

CIRCUIT: SPST

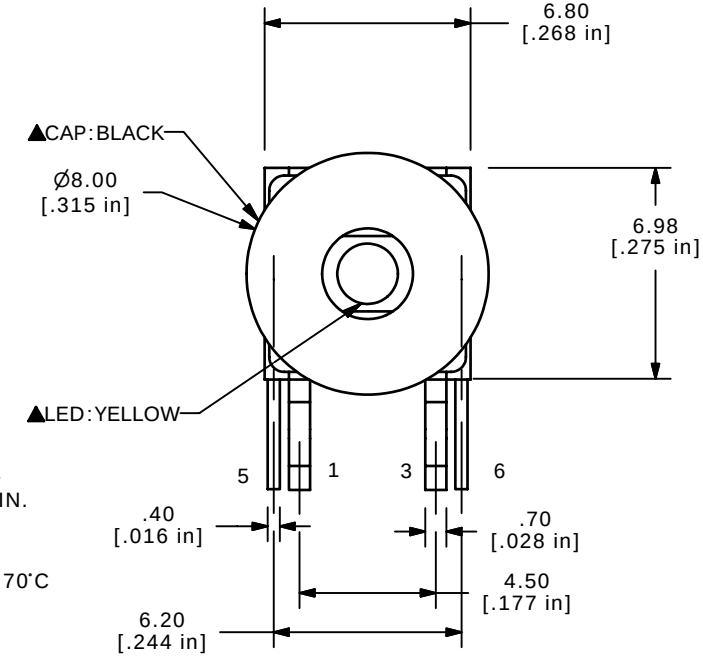

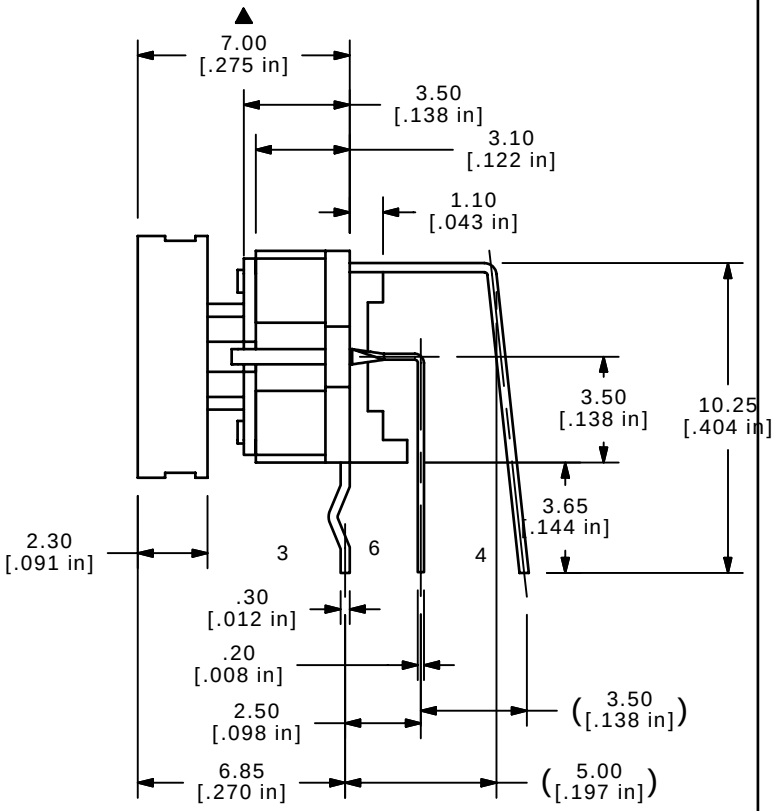

NOTES:

1. ALL DIMENSIONS IN MM [INCH]
2. GENERAL TOLERANCE: X.X=±0.4
   X.XX=±0.25
3. RATING: 12VDC @ 50mA
4. ▲CONTACT RESISTANCE: 100mΩ MAX.
5. INSULATION RESISTANCE: 100MΩ MIN.
6. OPERATING FORCE: 160±50gf
7. TRAVEL: 0.2±0.1mm
8. OPERATING TEMPURATURE: -20˚C TO 70˚C
9. OPEREATING LIFE: 50,000 CYCLES
10. ▲LED: YELLOW
11. ▲ DENOTES CRITICAL PARAMETERS
12. 2002/95/EC (ROHS) COMPLIANT

REV	PCR NO	DESCRIPTION	DATE	BY
E	17280	ADD GENERAL TOLERANCE NOTE	5/11/07	TN
D	16026	UPDATE LED SPECS	5/16/06	CT
C	15894	EDIT LED SPECS	3/23/06	PH
B	15867	ADD CAP, CHANGE TO YELLOW LED	3/15/06	PH

THE INFORMATION CONTAINED IN THIS DOCUMENT IS PROPRIETARY TO E-SWITCH AND IS NOT TO BE COPIED OR TRANSFERRED

E-SWITCH

TITLE TL1260YQRBLK

SCALE	DATE	DR	DWG	REV
4:1	5/11/2007	TN	B200001	E