SHEET OF

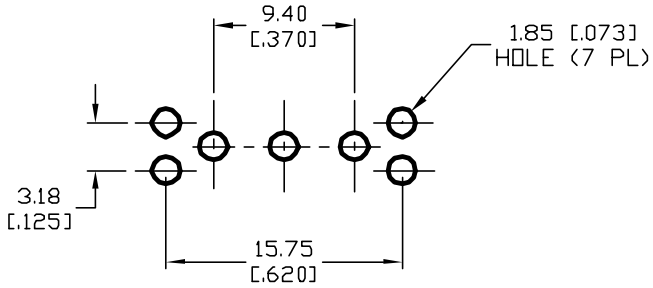

RECOMMENDED P.C.B LAYOUT

SCALE: 2X

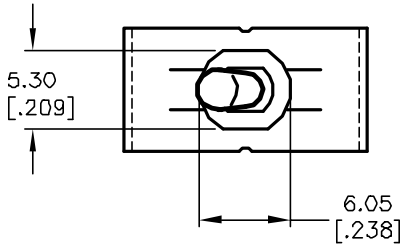

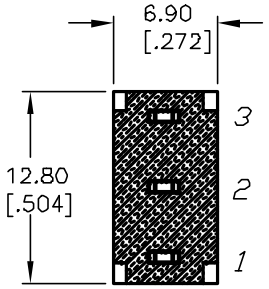

SECTION A-A

CONTACTS & BRACKET REMOVED FOR CLAIRITY

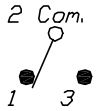

SPDT CIRCUIT
CONTACT CONFIGURATION

SWITCH FUNCTION		
POS. 1	POS. 2	POS. 3
ON	NONE	ON
2-3	OPEN	2-1

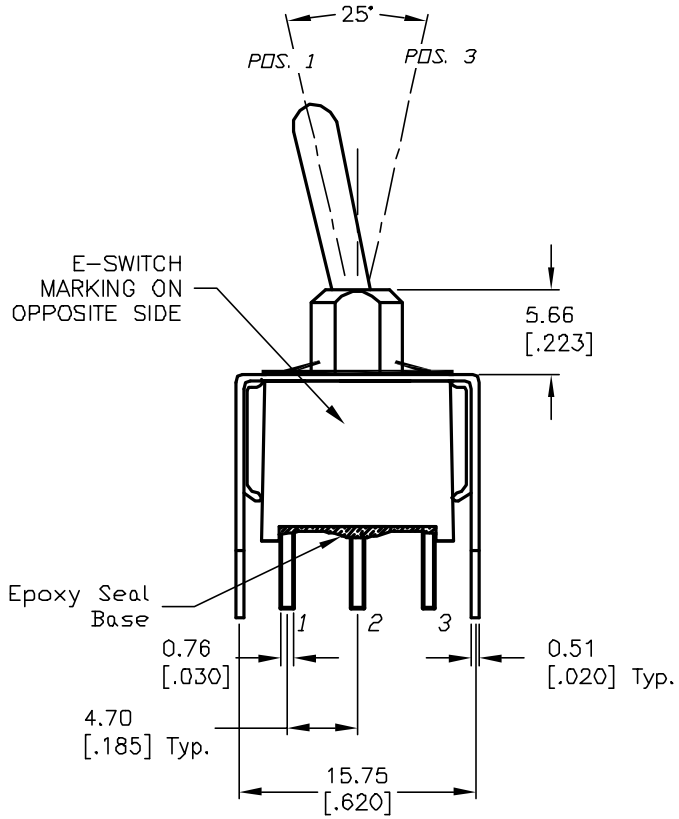

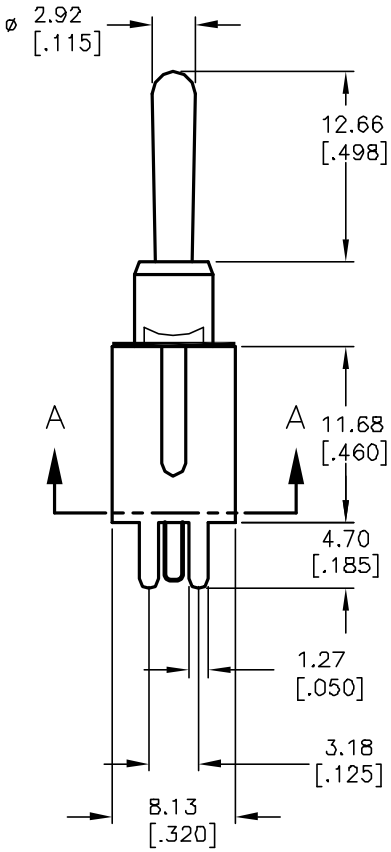

NOTES:

1. ALL DIMENSIONS IN MM
2. GENERAL TOLERANCE: X.X=±0.4
   X.XX=±0.25
3. TERMINAL NUMBERS FOR REF ONLY
4. RATING: 5A @120VAC OR 28VDC
   2A @250VAC
5. FIXED TERM. & MOVING CONTACT: Cu Alloy w/Silver Plate
6. ELECTRIC LIFE: 50,000 make-and-break cycles at full load.
7. INSULATION RESISTANCE: 1,000 Mega-ohm min.
8. DIELECTRIC STRENGTH: 1,000 V RMS @sea level.
9. OPERATING TEMP.: -30°C to 85°C

REV.	ECN No.	DESCRIPTION	DATE	CHKD
A	11855	RELEASED FOR PRODUCTION	11/28/01	CB

THE INFORMATION CONTAINED IN THIS DOCUMENT IS PROPRIETARY TO E-SWITCH AND IS NOT TO BE COPIED OR TRANSFERRED

E-SWITCH®

TITLE				
100A WSP-1 T1 B4 VS2 Q E				
SCALE	DATE	DR	DWG	REV
2:1	11/28/01	CB	T101031	A