SHEET OF

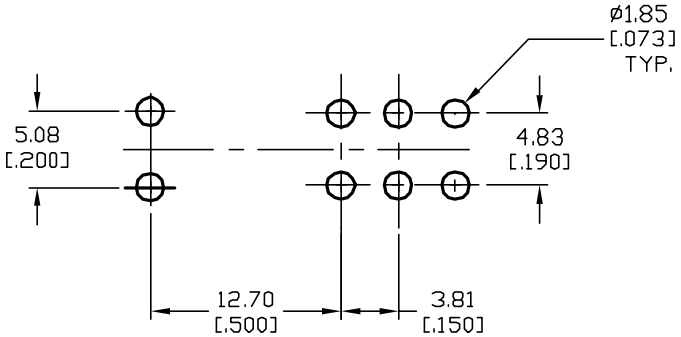

RECOMMENDED P.C.B. LAYOUT

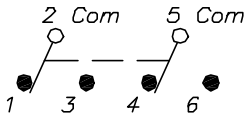

CIRCUIT: DPDT

SWITCH FUNCTION		
POS. 1	POS. 2	POS. 3
ON	OFF	ON
2-3,5-6	OPEN	2-1,5-4

NOTES:

1. ALL DIMENSIONS IN MM [INCH]
2. GENERAL TOLERANCE: X.X=±0.4
   X.XX=±0.25
3. TERMINAL NUMBERS FOR REF ONLY
4. RATING: 5A @120VAC OR 28VDC:
   2A @250VAC
5. FIXED TERM. & MOVING CONTACT: Cu Alloy w/ Silver plate.
6. ELECTRIC LIFE: 50,000 make-and-break cycles at full load.
7. INSULATION RESISTANCE: 1,000 Mega-ohm min.
8. DIELECTRIC STRENGTH: 1,000 V RMS @sea level.
9. OPERATING TEMP.: -30°C to +85°C

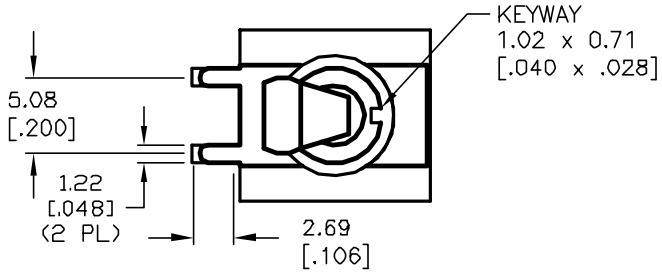

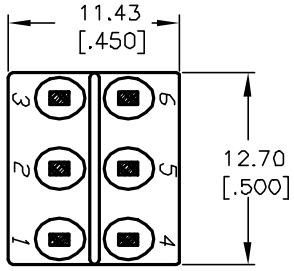

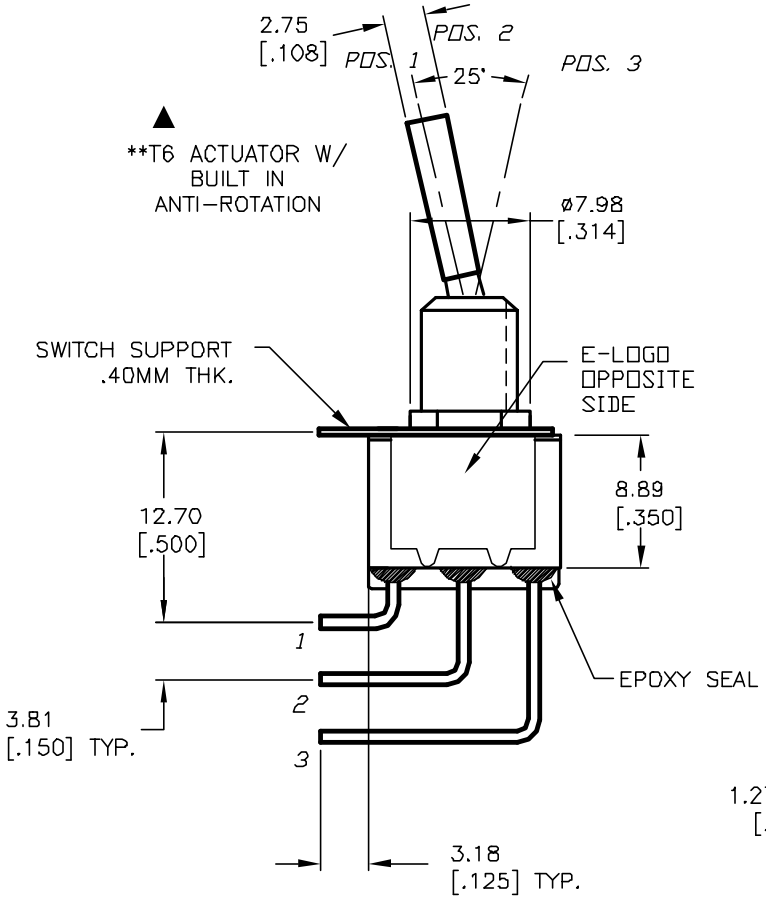

SECTION A-A
CROPPED FOR CLARITY

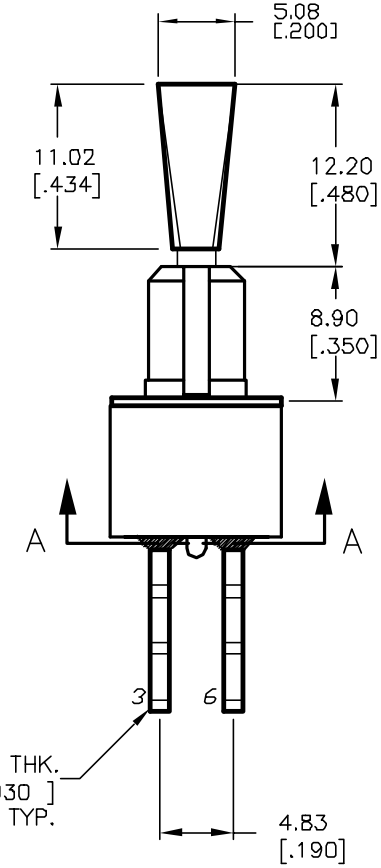

REV.	ECN No.	DESCRIPTION	DATE	CHKD
A	12018	RELEASED FOR PRODUCTION	3/26/02	CB

THE INFORMATION CONTAINED IN THIS DOCUMENT IS PROPRIETARY TO E-SWITCH AND IS NOT TO BE COPIED OR TRANSFERRED

E-SWITCH®

TITLE				
100 DP-3 T6 B12 M7 Q E				
SCALE 2:1	DATE 3/26/02	DR CB	DWG T123037	REV A