SHEET OF

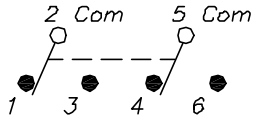

CIRCUIT: DPDT

CONTACT CONFIGURATION

SWITCH FUNCTION		
POS. 1	POS. 2	POS. 3
ON	OFF	ON
2-3, 5-6	OPEN	2-1, 5-4

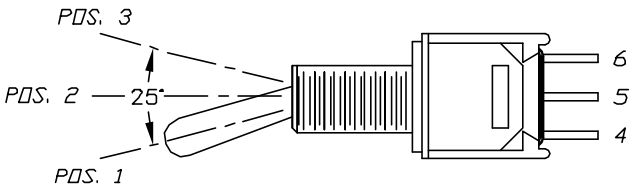

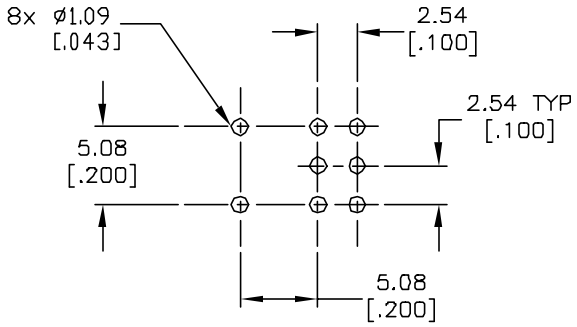

RECOMMENDED P.C.B LAYOUT

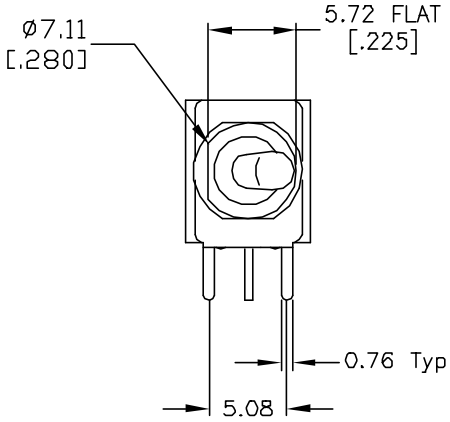

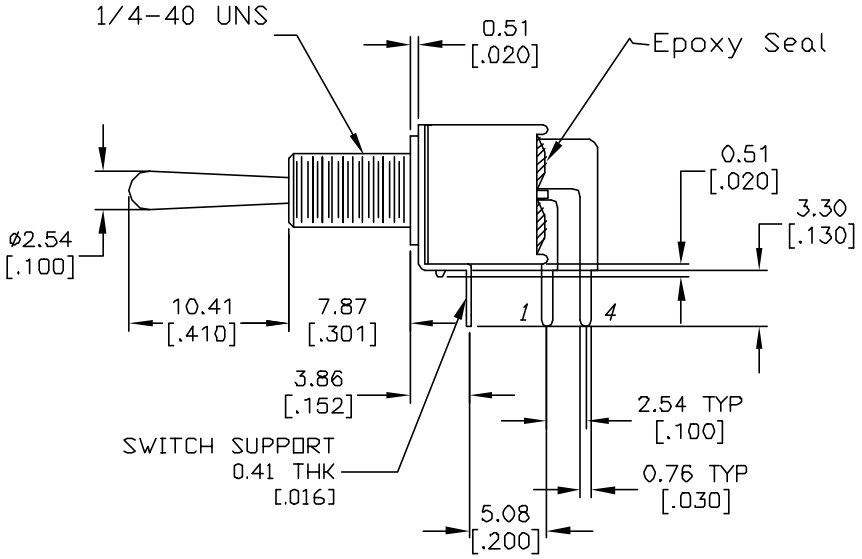

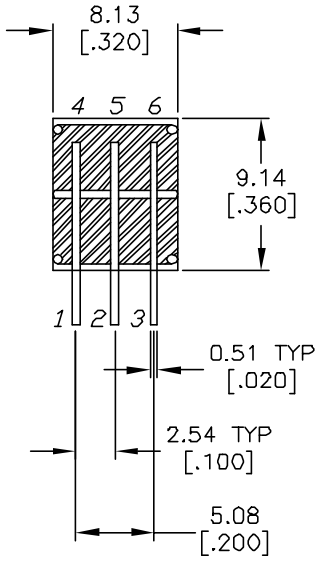

NOTES:

1. ALL DIMENSIONS IN MM [INCH]
2. GENERAL TOLERANCE: X.X=±0.4
   X.XX=±0.25
3. TERM. NOS. FOR REF. ONLY
4. CONTACT RATING: 0.4 VA MAX. @ 20 VAC OR DC MAX
5. ▲ FIXED TERMINAL & MOVING CONTACT:
   COPPER ALLOY W/ GOLD PLATE OVER NICKEL PLATE
6. ELECTRIC LIFE: 30,000 make-and-break cycles
   at full load.
7. INSULATION RESISTANCE: 1,000 MΩ MIN.
8. DIELECTRIC STRENGTH: 1,000 V RMS @sea level.
9. OPERATING TEMP.: -30°C to 85°C

REV.	ECN No.	DESCRIPTION	DATE	CHKD
A	11731	RELEASED FOR PRODUCTION	10/11/01	CJC

THE INFORMATION CONTAINED IN THIS DOCUMENT IS PROPRIETARY TO E-SWITCH AND IS NOT TO BE COPIED OR TRANSFERRED

E-SWITCH®

TITLE 200 MDP-3 T4 B5 M6 R E

SCALE	DATE	DR	DWG	REV
2:1	10/11/01	CJC	T201233	A