A 90-287

DWG. SIZE

RAW MATERIAL SPECIFICATION WITH PART NO.

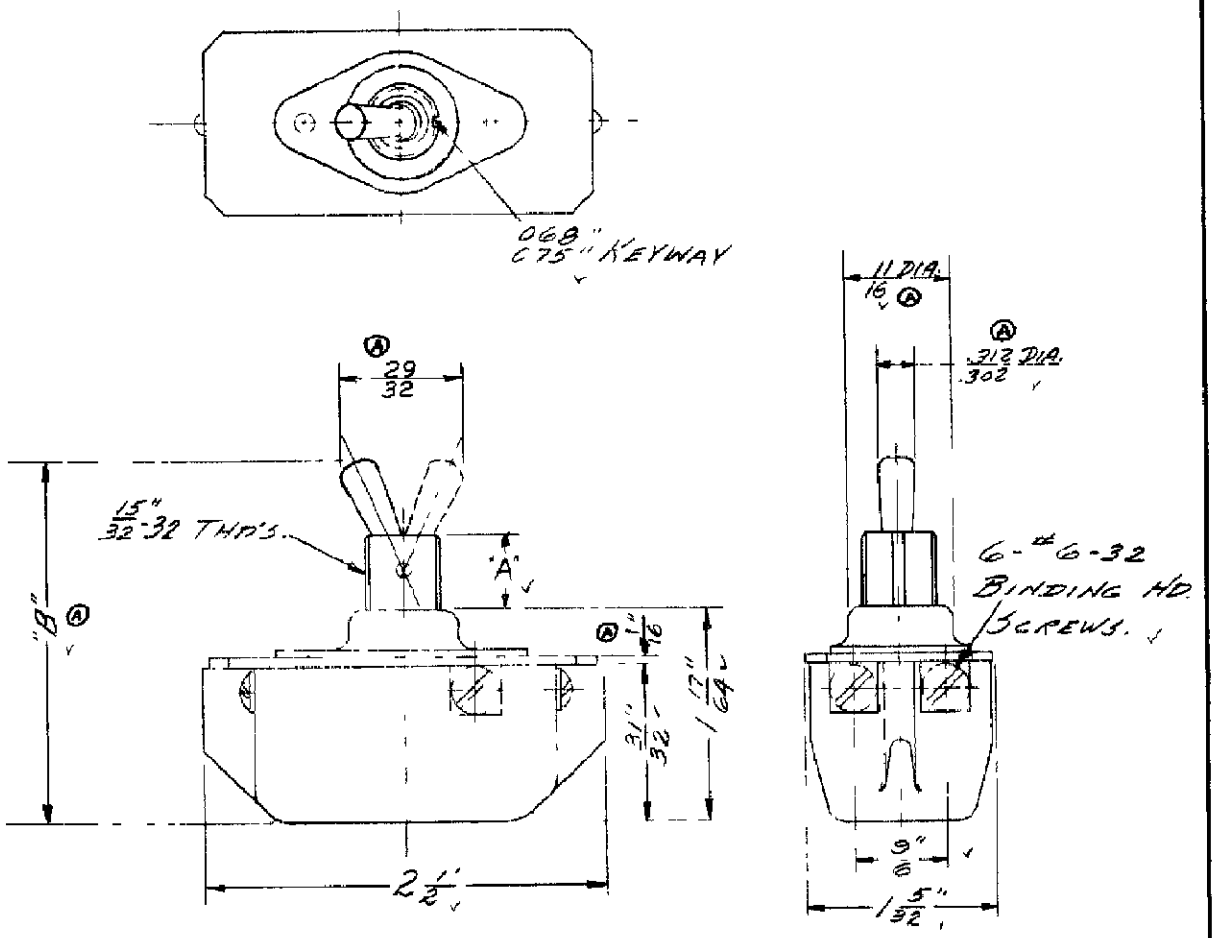

FOR 90-283-2	A = 12/32"	B = 2 35/64
FOR 90-283	A = 11/32"	B = 2 27/64

NAME DIM. FOR D.P.D.T., 10 AMP. ONE HOLE MTG. TOOL HANDLE SW.

ORDER NUMBER	SUPERSEDES	SUPERSEDED	FINISH	FIRST ASSEMBLY WHERE USED
DEV. 3829-10	INTERCHANGEABLE	INTERCHANGEABLE	—	SEE ABOVE

A	"B" DIM. 29/32 & 1/16 DIM. 11/16 DIM. & .312-.302 DIA. ADDED TO 90-283-2. DW. 3281-10	H.A.A. 11-2-89	E.R.L. 9-1-89
A02	REINSTATED. ECNA09260001	VL 9/27/00	RH 9/27/00

DRAWN BY H.W. Schlapp 9/23/38 TRACED BY CHECKED BY J. Rach 9/23/38 APPROVED BY 3/26/38

STANDARD TOLERANCES SC-275 APPLY TO DIMENSIONS FOR WHICH TOLERANCES ARE NOT SHOWN

SCALE 1" = 1"

CUTLER-HAMMER, INC. MILWAUKEE NEW YORK

A DWG. SIZE 90-287

SC 1-0001-1

CHARLES BRUNING CO., INC