Hand Crimp Tool Specification Sheet
Order No. 63811-3200
Replaces 11-01-0084 (HTR1031E)
And 11-01-0211 (HTR1031E1)

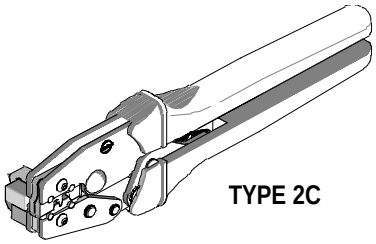

TYPE 2C

FEATURES

- A full cycle ratcheting hand tool ensures complete crimps
- Ergonomic soft grip handles for comfortable crimping
- A precision user-friendly terminal locator wire stop holds terminals in the proper crimping position
- This tool is RoHS compliant

SCOPE

Products: 14-24 AWG .093" Pin and Socket, Commoning Connector Terminal, Claspcon™, .125" Pin and Socket Crimp Terminals.

Terminal Series No.	Terminal Order No.				Wire Size		Insulation Diameter		Strip Length	
	Loose Piece			Reel	AWG	mm²	mm	In.	mm	In.
1189	02-09-1103	02-09-5111	39-00-0289		14-20	2.08-0.52	1.65-4.06	.065-.160	3.30-3.80	.130-.150
	02-09-1104	39-00-0072	39-00-0291							
	02-09-3102	39-00-0135	39-00-0294							
	02-09-3104	39-00-0288	39-00-0295							
	02-09-5106									
1190	02-09-2103	02-09-6110	39-00-0299		14-20	2.08-0.52	1.65-4.06	.065-.160	3.30-3.80	.130-.150
	02-09-4104	39-00-0106	39-00-0301							
	02-09-6106	39-00-0297								
1380	02-09-2118	02-09-6126	39-00-0304		18-22	0.82-0.32	1.52-3.05	.060-.120	3.30-3.80	.130-.150
	02-09-2119	39-00-0302	39-00-0306							
	02-09-6123									
1381	02-09-1118	39-00-0307	39-00-0313		18-22	0.82-0.32	1.52-3.05	.060-.120	3.30-3.80	.130-.150
	02-09-1119	39-00-0308	39-00-0314							
	02-09-5133	39-00-0310	40-01-1191							
	02-09-5142									
1457-1	05-02-0048			05-02-0047	18-22	0.82-0.32	1.55-2.59	.061-.102	3.30-3.80	.130-.150
	05-02-0057			05-02-0056						
				05-02-0058						
1457-2	05-02-0050		05-02-0049		14-16	2.08-0.82	3.56 Max.	.140 Max.	3.30-3.80	.130-.150
1881-2	02-08-1102				16-24	1.31-0.32	3.51 Max.	.138 Max.	3.30-3.80	.130-.150
1973	02-09-8104				18-22	0.82-0.32	3.51 Max.	.138 Max.	3.30-3.80	.130-.150
1973-2	02-09-8109				14-18	2.08-1.31	4.06 Max.	.160 Max.	3.30-3.80	.130-.150
2046	18-12-2222				16-18	2.08-1.31	3.05 Max.	.120 Max.	3.30-3.80	.130-.150
2047	18-12-1222				16-18	2.08-1.31	3.05 Max.	.120 Max.	3.30-3.80	.130-.150
2273	02-09-1123	02-09-1140			18-22	0.82-0.32	1.52-3.05	.060-.120	3.30-3.80	.130-.150
2282	18-09-2804	18-09-2807			14-18	2.08-0.82	3.56 Max.	.140 Max.	3.60-4.10	.140-.160
4272	02-09-1149				18-22	0.82-0.32	1.52-3.05	.060-.120	3.30-3.80	.130-.150
4549	02-09-2167				14-20	2.08-0.52	3.56 Max.	.140 Max.	3.30-3.80	.130-.150
4550	02-09-1206	02-09-5170			14-20	2.08-0.52	3.56 Max	.140 Max	3.30-3.80	.130-.150
6271	02-09-1212	02-09-5208			18-22	0.82-0.32	1.52-3.05	.060-.120	3.30-3.80	.130-.150

Terminal Series No.	Terminal Order No.				Wire Size		Insulation Diameter		Strip Length	
	Loose Piece			Reel	AWG	mm²	mm	In.	mm	In.
6310	02-09-1211	02-09-5206			14-20	2.08-0.52	1.65-4.06	.065-.160	3.30-3.80	.130-.150
7238	02-09-1112				14-18	2.08-0.82	3.56 Max.	.140 Max.	3.60-4.10	.140-.160
Customer to cut off terminal from reel: 0.18mm (.007") maximum Cut-off Tab.										

DEFINITION OF TERMS

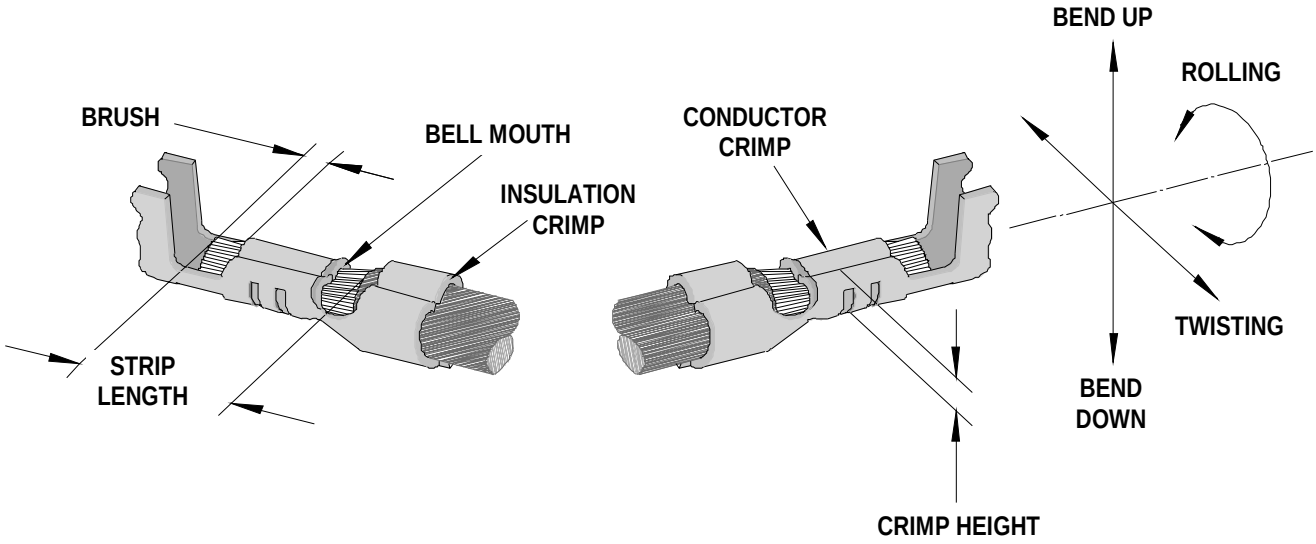

The above terminal drawing is a generic terminal representation. It is not an image of a terminal listed in the scope.

CONDITIONS:

After crimping, the conductor profiles should measure the following (see notes on page 5).

Terminal Series No.	Hand Tool Locator	Wire Size		Conductor Crimp Height (REF)		Conductor Crimp Width (Ref)		Pull Force Min.		Profile	
		AWG	mm²	mm	In.	mm	In.	N	Lb.	A	B
1189	1	14	2.08	1.38-1.48	.054-.058	2.30	.090	178.0	40.00	X	
		16	1.31	1.38-1.48	.054-.058	2.30	.090	155.0	35.00	X	
		18	0.82	1.23-1.33	.049-.052	1.70	.067	111.3	25.00		X
		20	0.52	1.23-1.33	.049-.052	1.70	.067	66.8	15.00		X
1190	1	14	2.08	1.38-1.48	.054-.058	2.30	.090	178.0	40.00	X	
		16	1.31	1.38-1.48	.054-.058	2.30	.090	155.8	35.00	X	
		18	0.82	1.23-1.33	.049-.052	1.70	.067	111.3	25.00		X
		20	0.52	1.23-1.33	.049-.052	1.70	.067	66.8	15.00		X
1380	1	18	0.82	1.23-1.33	.049-.052	1.70	.067	111.3	25.00		X
		20	0.52	1.23-1.33	.049-.052	1.70	.067	66.8	15.00		X
		22	0.32	1.23-1.33	.049-.052	1.70	.067	53.4	12.00		X
1381	1	18	0.82	1.23-1.33	.049-.052	1.70	.067	111.3	25.00		X
		20	0.52	1.23-1.33	.049-.052	1.70	.067	66.8	15.00		X
		22	0.32	1.23-1.33	.049-.052	1.70	.067	53.4	12.00		X
1457-1	2	18	0.82	1.23-1.33	.049-.052	1.70	.067	111.3	25.00		X
		20	0.52	1.23-1.33	.049-.052	1.70	.067	66.8	15.00		X
		22	0.32	1.23-1.33	.049-.052	1.70	.067	53.4	12.00		X
1457-2	2	14	2.08	1.38-1.48	.054-.058	2.30	.090	178.0	40.00	X	
		16	1.31	1.38-1.48	.054-.058	2.30	.090	155.8	35.00	X	

Terminal Series No.	Hand Tool Locator	Wire Size		Conductor Crimp Height (REF)		Conductor Crimp Width (Ref)		Pull Force Min.		Profile	
		AWG	mm^2	mm	In.	mm	In.	N	Lb.	A	B
1881-2	1	16	1.31	1.38-1.48	.054-.058	2.30	.090	155.8	35.00	X	
		18	0.82	1.23-1.33	.049-.052	1.70	.067	111.3	25.00		X
		20	0.52	1.23-1.33	.049-.052	1.70	.067	66.8	15.00		X
		22	0.32	1.23-1.33	.049-.052	1.70	.067	53.4	12.00		X
		24	0.20	1.23-1.33	.049-.052	1.70	.067	35.6	8.00		X
1973	2	18	0.82	1.23-1.33	.049-.052	1.70	.067	155.8	35.00		X
		20	0.52	1.23-1.33	.049-.052	1.70	.067	80.1	18.00		X
		22	0.32	1.23-1.33	.049-.052	1.70	.067	53.4	12.00		X
1973-2	1	14	2.08	1.38-1.48	.054-.058	2.30	.090	178.0	40.00	X	
		16	1.31	1.38-1.48	.054-.058	2.30	.090	155.8	35.00	X	
		18	0.82	1.23-1.33	.049-.052	1.70	.067	111.3	25.00		X
🌡 2046	N/A	16	1.31	1.38-1.48	.054-.058	2.30	.090	200.3	45.00	X	
		18	0.82	1.38-1.48	.054-.058	2.30	.090	155.8	35.00	X	
🌡 2047	N/A	16	1.31	1.38-1.48	.054-.058	2.30	.090	200.3	45.00	X	
		18	0.82	1.38-1.48	.054-.058	2.30	.090	155.8	35.00	X	
2273	1	18	0.82	1.23-1.33	.049-.052	1.70	.067	89.0	20.00		X
		20	0.52	1.23-1.33	.049-.052	1.70	.067	62.3	14.00		X
		22	0.32	1.23-1.33	.049-.052	1.70	.067	44.5	10.00		X
2282	1	14	2.08	1.38-1.48	.054-.058	2.30	.090	178.0	40.00	X	
		16	1.31	1.38-1.48	.054-.058	2.30	.090	155.8	35.00	X	
		18	0.82	1.23-1.33	.049-.052	1.70	.067	111.3	25.00		X
4272	1	18	0.82	1.23-1.33	.049-.052	1.70	.067	89.0	20.00		X
		20	0.52	1.23-1.33	.049-.052	1.70	.067	62.3	14.00		X
		22	0.32	1.23-1.33	.049-.052	1.70	.067	44.5	10.00		X
4549	1	14	2.08	1.38-1.48	.054-.058	2.30	.090	178.0	40.00	X	
		16	1.31	1.38-1.48	.054-.058	2.30	.090	155.8	35.00	X	
		18	0.82	1.23-1.33	.049-.052	1.70	.067	111.3	25.00		X
		20	0.52	1.23-1.33	.049-.052	1.70	.067	66.8	15.00		X
4550	1	14	2.08	1.38-1.48	.054-.058	2.30	.090	178.0	40.00	X	
		16	1.31	1.38-1.48	.054-.058	2.30	.090	155.8	35.00	X	
		18	0.82	1.23-1.33	.049-.052	1.70	.067	111.3	25.00		X
		22	0.52	1.23-1.33	.049-.052	1.70	.067	66.8	15.00		X
6271	1	18	0.82	1.23-1.33	.049-.052	1.70	.067	89.0	20.00		X
		20	0.52	1.23-1.33	.049-.052	1.70	.067	62.3	14.00		X
		22	0.32	1.23-1.33	.049-.052	1.70	.067	44.5	10.00		X
6310	1	14	2.08	1.38-1.48	.054-.058	2.30	.090	178.0	40.00	X	
		16	1.31	1.23-1.33	.049-.052	1.70	.067	155.8	35.00		X
		18	0.82	1.23-1.33	.049-.052	1.70	.067	89.0	20.00		X
		20	0.52	1.23-1.33	.049-.052	1.70	.067	62.3	14.00		X
7238	1	14	2.08	1.38-1.48	.054-.058	2.30	.090	178.0	40.00	X	
		16	1.31	1.38-1.48	.054-.058	2.30	.090	155.8	35.00	X	
		18	0.82	1.38-1.48	.054-.058	2.30	.090	111.3	25.00	X	

OPERATION

CAUTION: Install only Molex terminals listed above with this tool. Do not crimp hardened objects damage can occur to the tool or die.

Open the tool by squeezing the handles together, at the end of the closing stroke, the ratchet mechanism will release the handles, and the hand tool will spring open.

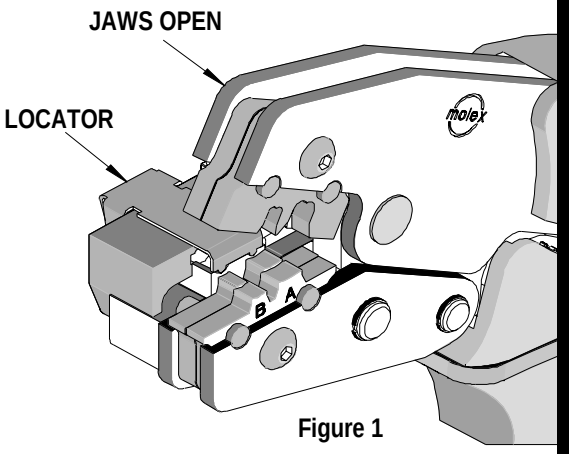

Figure 1

Crimping Terminals

1. Select the desired terminal listed in the preceding charts. Make sure that the proper locator is mounted on the tool.
2. Swing the terminal locator away from the crimp tool shown in Figure 2. Some terminals with large insulation grips may interfere with the crimp tooling when swinging the locator into position. The terminal must then be loaded into the locator in the closed/crimp position.

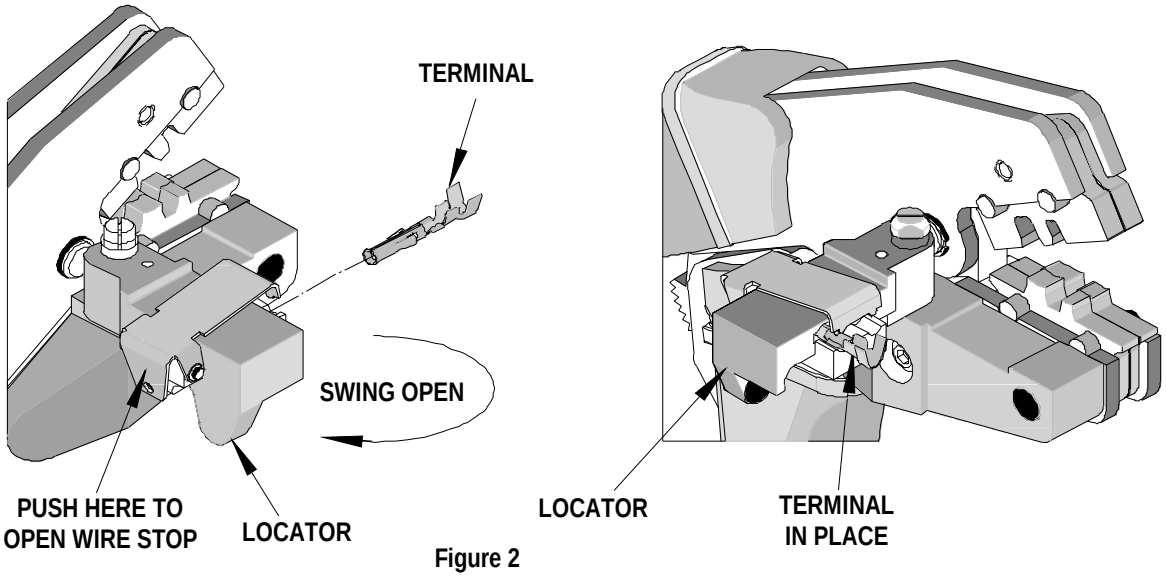

Figure 2

3. When using 63811-3275 (Locator No. 1), press down on the wire stop on the locator as shown in Figure 2. Insert the proper terminal into the proper nest opening. Make sure when choosing the nest opening, it will correspond with the A or B profile on the hand tool.
4. Return the locator to its original position.
5. Insert the proper wire over the terminal. Gently touch the wire stop with the end of the wire. See Figure 3.
6. Compress the terminal by squeezing the tool handles until the ratchet mechanism cycle has been completed. Release handles to open the jaws.

Note: The tamper proof ratchet action will not release the tool until it has been fully closed.

7. Remove the crimp terminal from the terminal locator by pressing down on the wire stop and gently pulling on the wire. The terminal locator can by in either position
8. Visually inspect the crimped terminal for proper crimp location and crimp height.

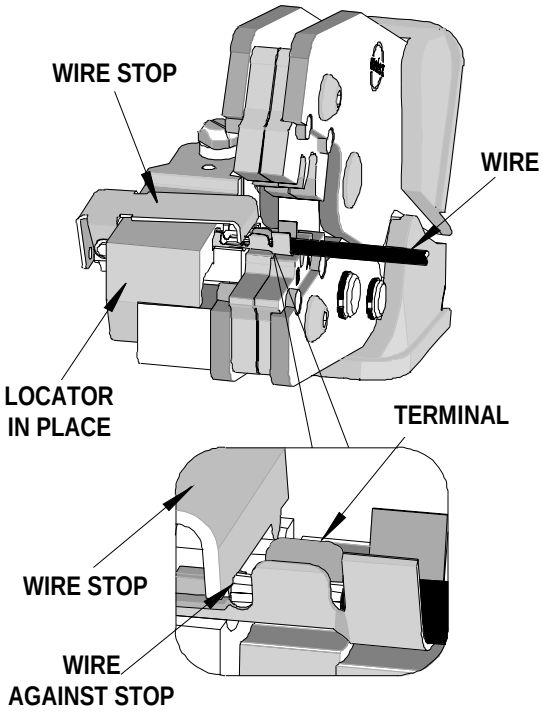

Figure 3

✳ **Crimping Terminals without a Locator**

1. With the hand tool in the open position, select the proper profile.
2. Position the terminal in the proper profile; partially close the hand tool until the terminal is held in place. The terminal should be positioned so that the front of the insulation grips is flush with the front face of the insulation tooling. See Figure 3A.
3. Gently slip the wire into the terminal, and then position the insulation and stripped strands into the terminal insulation and conductor grips. Note: No wire stop is provided. If the wire will not fit into the partially closed tool, due to large insulation diameter, the terminal and wire must then be placed in the open tool. Applying slight downward pressure on the wire may help hold the terminal in place while crimping.
4. Compress the terminal by squeezing the tool handles until the ratchet mechanism cycle has been completed. Release handles to open the jaws.

Note:
A crimp height chart is provided with this manual as Reference Only. Due to the wide range of wires, strands, insulation diameters, and durometers, actual crimp height measurements may very slightly. An occasional, destructive, pull force test should be preformed to check hand tool crimp. Pull Force value Must exceed the Minimum pull force specifications listed on pages 2 and 3.

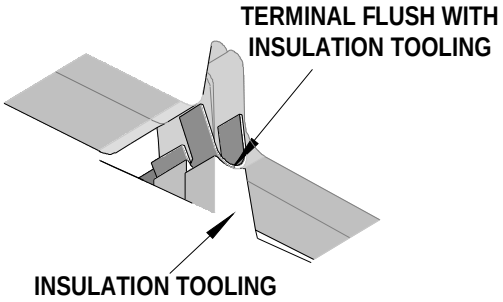

Figure 3A

Locator Change Over

Two styles of locators are provided with the crimp hand tool 63811-3200. They are locator no. 1 (63811-3275), which is black and locator no.2 (63811-3276), which is gray. Make sure the desired style of locator is installed for the proper terminal and wire. Follow the steps below to change the locators.

1. Open the crimp hand tool.
2. Swing the existing locator open and away from the hand tool.
3. Firmly press down on the brass pivot shaft with your thumb, while pulling the locator up. Slip the locator off the top of the brass pivot shaft. See Figure 4.
4. Replace it with the desired locator by putting over the brass pivot shaft and snapping it into place.

Maintenance

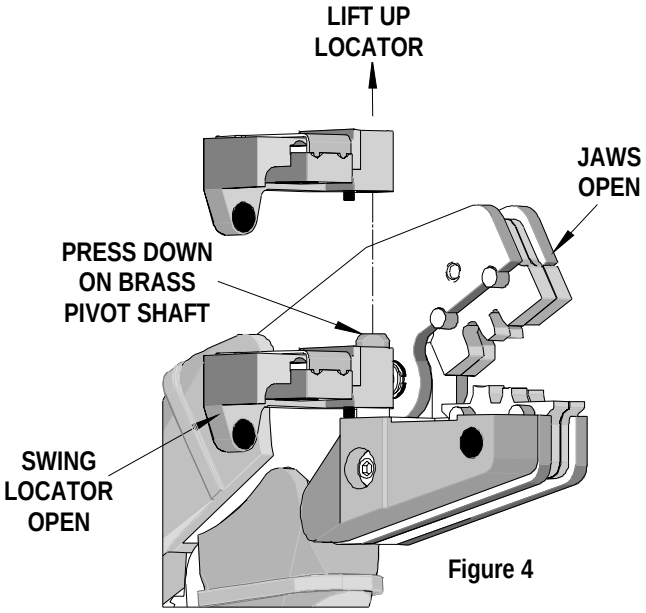

Figure 4

It is recommended that each operator of the tool be made aware of, and responsible for, the following maintenance steps:

1. Remove dust, moisture, and other contaminants with a clean brush, or soft, lint free cloth.
2. Do not use any abrasive materials that could damage the tool.
3. Make certain all pins; pivot points and bearing surfaces are protected with a thin coat of high quality machine oil. Do not oil excessively. The 63811-3200 was engineered for durability but like any fine piece of equipment it needs cleaning and lubrication for a maximum service life of trouble free crimping. Light oil such as 30 weights automotive oil used at the oil points shown in Figure 6, every 5,000 crimps or 3 months, will significantly enhance the tool life.
4. Wipe excess oil from hand tool, particularly from crimping area. Oil transferred from the crimping area onto certain terminations may affect the electrical characteristics of an application.
5. When tool is not in use, keep the handles closed to prevent objects from becoming lodged in the crimping dies, and store the tool in a clean, dry area.

Miscrimps or Jams

Should this tool ever become stuck or jammed in a partially closed position, **Do Not** force the handles open or closed. The tool will open easily by pressing the ratchet release lever (See Figure 6).

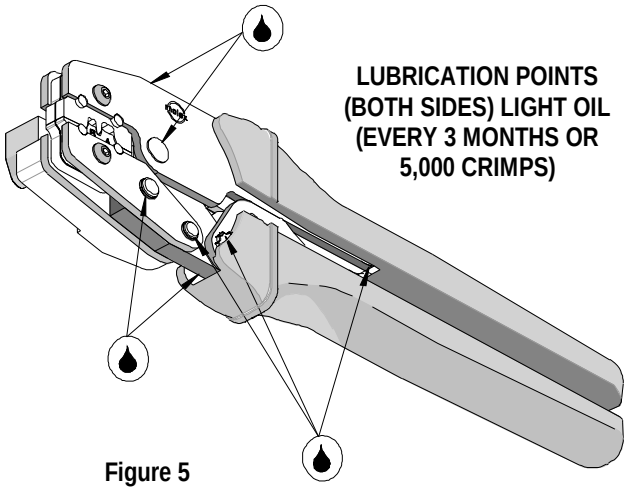

Figure 5

How to Adjust Tool Preload (See Figure 6)

This hand tool is factory preset to 25-45 LBS. preload. It may be necessary over the life of the tool to adjust tool handle preload force. Listed below are the steps required to adjust the crimping force of the hand tool to obtain proper crimp conditions:

1. Remove or fold back the handle grip from the handle to expose the eccentric axle.
2. Remove the locking screw with a 2mm hex wrench. The wrench set (63810-0101), is not supplied. It is sold separately from the hand tool.
3. Turning the eccentric axle counter-clockwise (CCW) will increase handle force.
4. Replace the locking screw, aligning the nearest notch in the setting wheel to locking screw.
5. Replace the handle grip.
6. Check the crimp specifications after tool handle preload force is adjusted.

Warranty

This tool is for electrical terminal crimping purposes only. This tool is made of the best quality materials. All vital components are long life tested. All tools are warranted to be free of manufacturing defects for a period of 30 days. Should such a defect occur, we will repair or exchange the tool free of charge. This repair or exchange will not be applicable to altered, misused, or damaged tools. This tool is designed for hand use only. Any clamping, fixturing, or use of handle extensions voids this warranty.

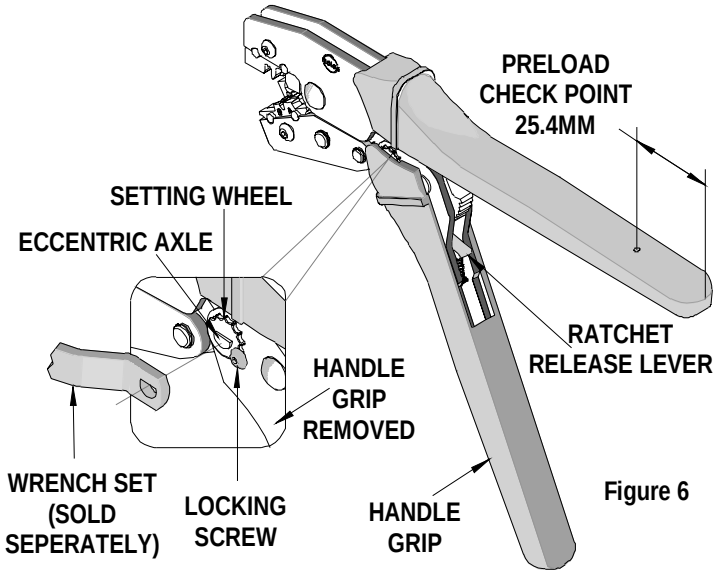

Figure 6

CAUTION: Molex crimp specifications are valid only when used with Molex terminals, applicators and tooling.

CAUTIONS

1. Manually powered hand tools are intended for low volume or field repair. This tool is NOT intended for production use. Repetitive use of this tool should be avoided.
2. Insulated rubber handles are not protection against electrical shock.
3. Wear eye protection at all times.
4. Use only Molex Terminal specified for crimping with the tool.

Certification

Molex does not certify or re-certify commercial grade hand tools but rather supplies the following guidelines for customers to re-certify hand tools.

- This tool is qualified to pull force only. To re-certify, crimp a terminal to a wire, which has been stripped 12.7mm (1/2") long, so there is no crimping of the insulation. Pull the terminal and wire at a rate no faster than 25mm (1.00") per minute. See the Molex web site for the Quality Crimp Handbook for more information on pull testing.
- If the tool does not meet minimum pull force values, handle preload should be increased and the pull test rerun, (See How To Adjust Preload).
- When the hand tool is no longer capable of achieving minimum pull force, it should be taken out of service and replaced.

PARTS LIST

Item Number	Order Number	Description	Quantity
1	63810-0101	Wrench Set (Not included)	0
2	63810-0102	Locator Base Assembly	1
3	63810-0103	Repair Kit (Not included)	0
4	63811-3275	Locator #1-Black	1
5	63811-3276	Locator #2-Gray	1

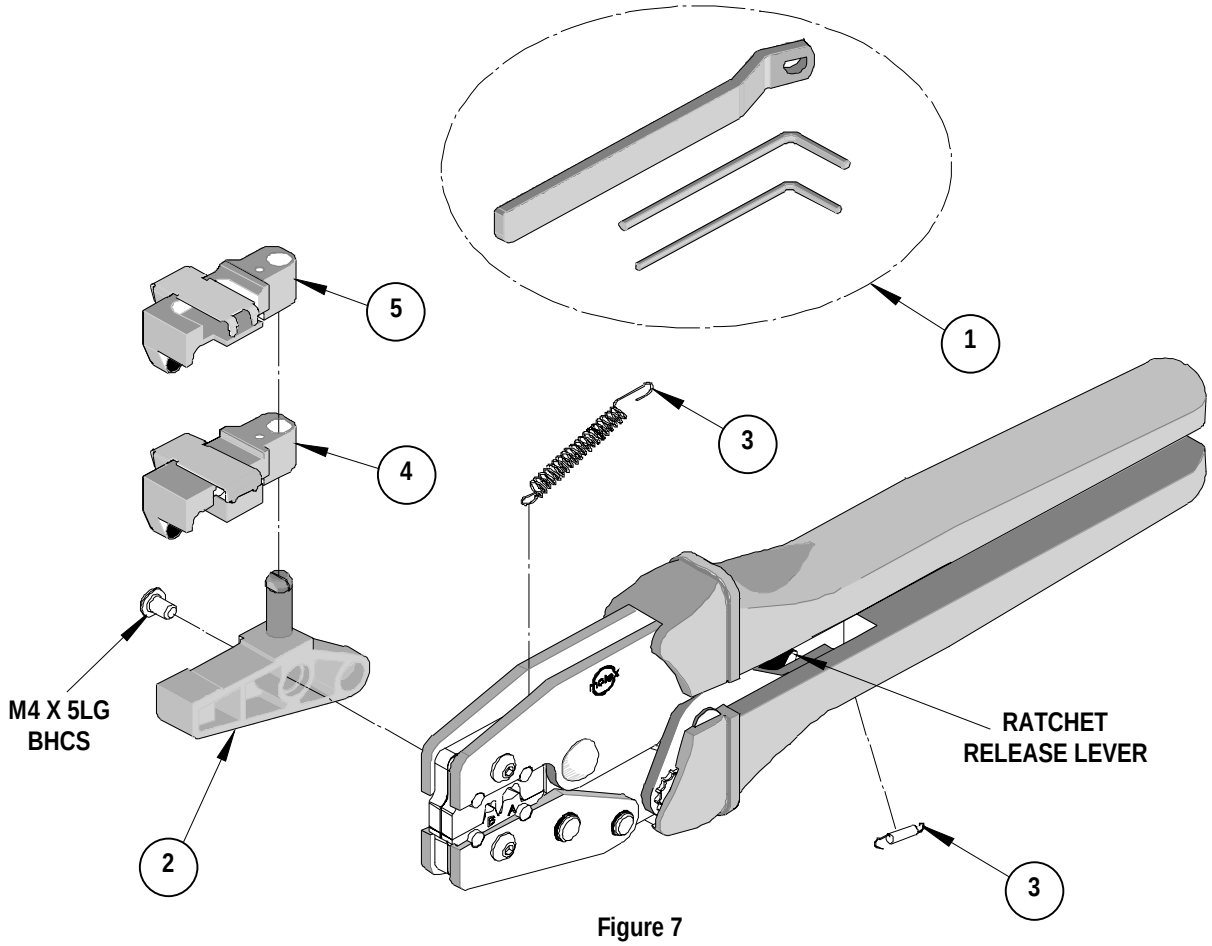

Figure 7

Americas Headquarters
Lisle, Illinois 60532 U.S.A.
1-800-78MOLEX
amerinfo@molex.com

Far East North Headquarters
Yamato, Kanagawa, Japan
81-462-65-2324
feninfo@molex.com

Far East South Headquarters
Jurong, Singapore
65-6-268-6868
fesinfo@molex.com

European Headquarters
Munich, Germany
49-89-413092-0
eurinfo@molex.com

Corporate Headquarters
2222 Wellington Ct.
Lisle, IL 60532 U.S.A.
630-969-4550
Fax: 630-969-1352

Visit our Web site at http://www.molex.com