10/100 PC CARD LAN MAGNETICS MODULES

Pulse
A TECHNITROL COMPANY

RoHS COMPLIANT

- RoHS-5 peak reflow temperature rating 235°C
- RoHS-6 peak reflow temperature rating 245°C
- Low profile packages from .094" (2,39mm) to .078" (1,98mm) for PC card and cardbus applications

Electrical Specifications @ 25°C — Operating Temperature 0°C to 70°C

RoHS-5 [3] Compliant Part Number	RoHS-6 [4] Compliant Part Number	Turns Ratio (±5%)		Insertion Loss (dB MAX)	Return Loss (dB MIN)			Differential to Common Mode Rejection (dB MIN)			Crosstalk (dB MIN)			Hipot (Vrms MIN)
		TX	RX	100 kHz-100 MHz	30 MHz	60 MHz	80 MHz	30 MHz	50 MHz	100 MHz	30 MHz	62 MHz	100 MHz	
PE-69012	—	1:1	1:1	-1.3	-18	-13	-11	-40	-35	-30	-40	-40	-35	1500
H0001	—	$\sqrt{2}$:1	1:1	-2.0	-18	-12	-10	-30	-30	-30	-40	-40	-35	1500
H0002	—	1:1	1:1	-1.3	-18	-13	-11	-30	-30	-30	-40	-35	-30	1500
H0009	H0009 NL[2a]	1:1	1:1	-0.9	-16	-12	-11	-35	-33	-20	-50	-45	-40	1500
H0013	H0013 NL[2a]	1:1	1:1	-0.9	-16	-12	-11	-35	-33	-20	-50	-45	-40	1500
H0019	H0019NL[2a]	1:1	1:1	-0.9	-18	-12	-11	-40	—	-30	-45	-45	-37	1500
H0020	H0020NL[2a]	1:1	1:1	-1.0	-16	-12	-12	-42	—	-33	-45	-40	-35	1500
H0022	H0022NL[2a]	1:1	1:1	-2.0	-18	-14	-12	-40	-35	-30	-50	-45	-40	1500
H0025	H0025NL[2a]	1:1	1:1	-2.0	-18	-12	-12	-40	-35	-30	-45	-45	-37	1500

1. **Add "T"** for Tape & Reel packaging, e.g. PE-69012**T**.
2. **MSL (**Moisture Sensitivity Level): a=1, b=2, c=3, d=4, e=5.
3. **RoHS-5:** Product does not contain 5 out of the 6 banned substances specified in the RoHS directive (product contains lead in applications considered solder).
4. **RoHS-6:** Product does not contain 5 out of the 6 banned substances specified in the RoHS directive. Some internal connections may contain lead in high-temperature solder (solder alloys containing more than 85% lead).

Mechanicals

PE-69012, H0001

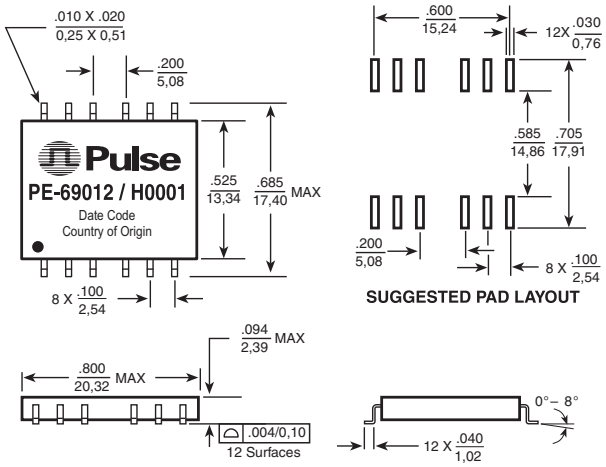

H0002

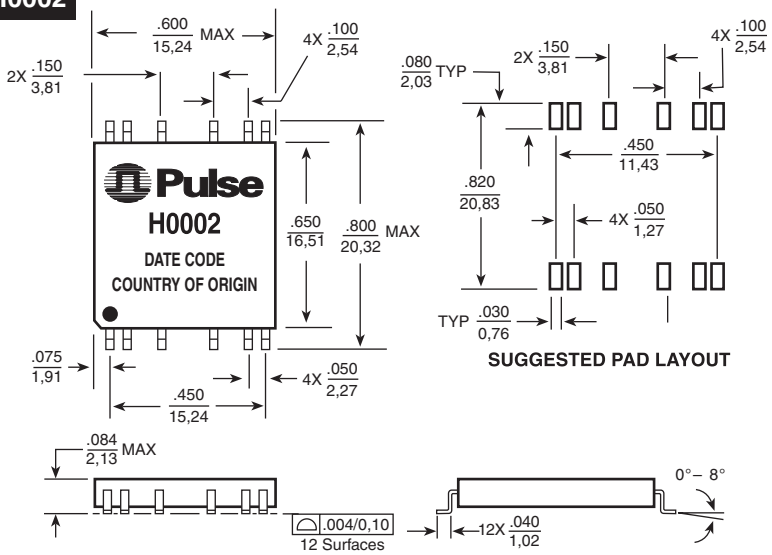

Weight . . . . . .1.3 grams
Tape & Reel 600/reel
Tube 25/tube

Dimensions: Inches / mm Unless otherwise specified, all tolerances are ± .010 / 0,25

Weight . . . . . .1.2 grams
Tape & Reel 900/reel
Tube 35/tube

10/100 PC CARD LAN MAGNETICS MODULES

Pulse
A TECHNITROL COMPANY

Mechanicals

H0013, H0019*

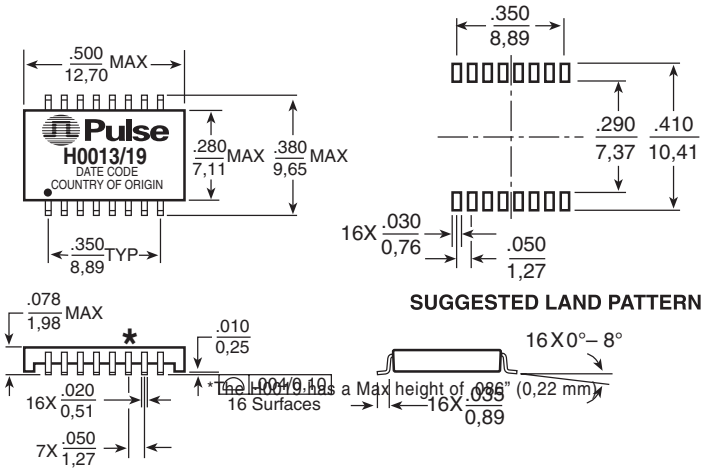

*The H0019 has a Max height of .086" (0,22 mm)

Weight . . . . . .3 grams
Tape & Reel 2000/reel
Tube 40/tube

H0009

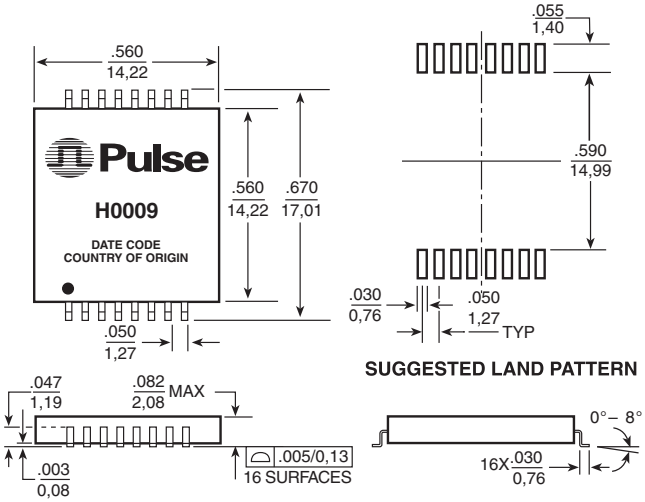

Dimensions: Inches / mm

Unless otherwise specified, all tolerances are ± .010 / 0,25

Weight . . . . . .1.3 grams
Tape & Reel 900/reel
Tube 25/tube

H0020

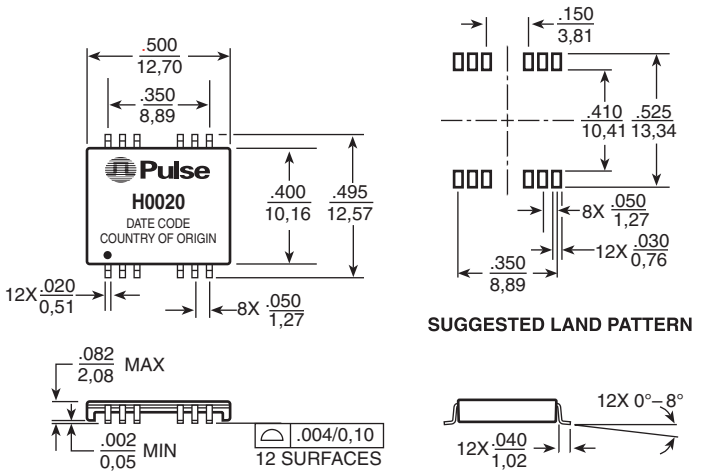

Weight . . . . . .4 grams
Tape & Reel 500/reel
Tube 40/tube

H0022, H0025

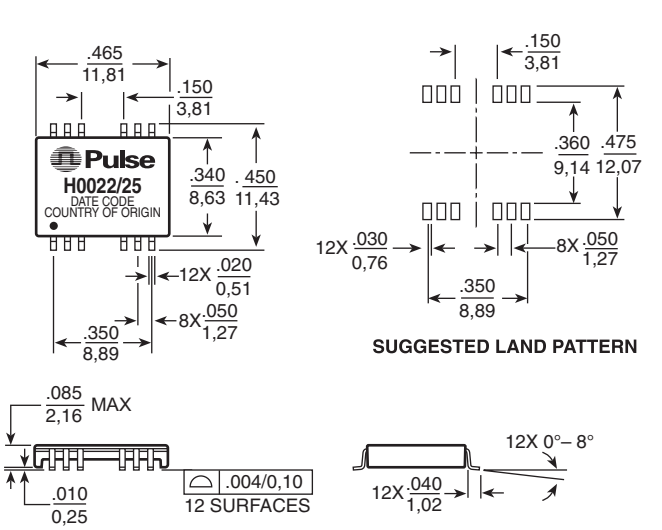

Dimensions: Inches / mm

Unless otherwise specified, all tolerances are ± .010 / 0,25

Weight . . . . . .355 grams
Tape & Reel 1000/reel
Tube 40/tube

Schematics

PE-69012, H0001

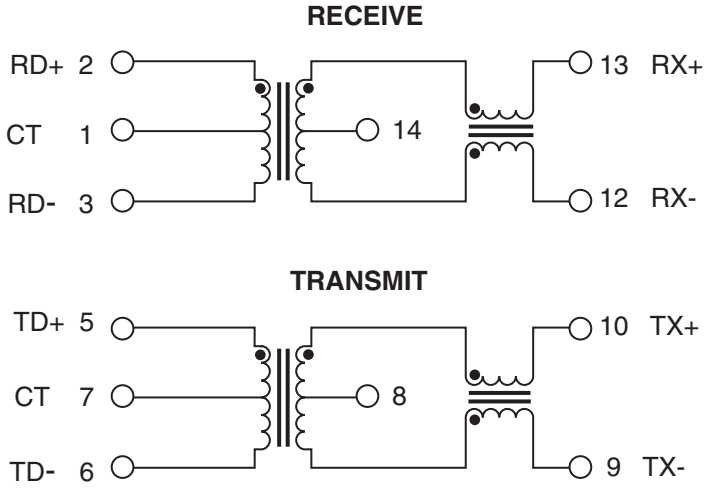

NOTE: Transmit and receive channels are interchangeable on the PE-69012.

H0002

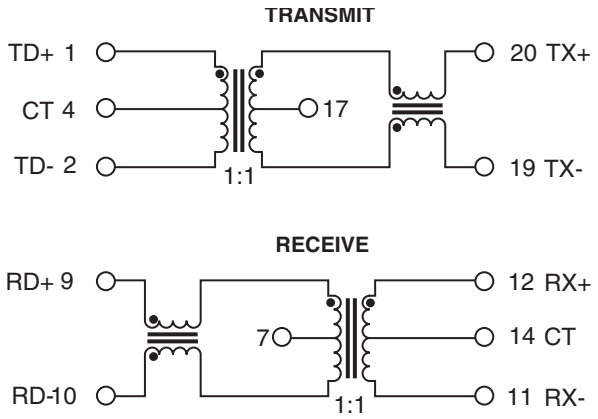

H0009, H0013, H0019, H0025

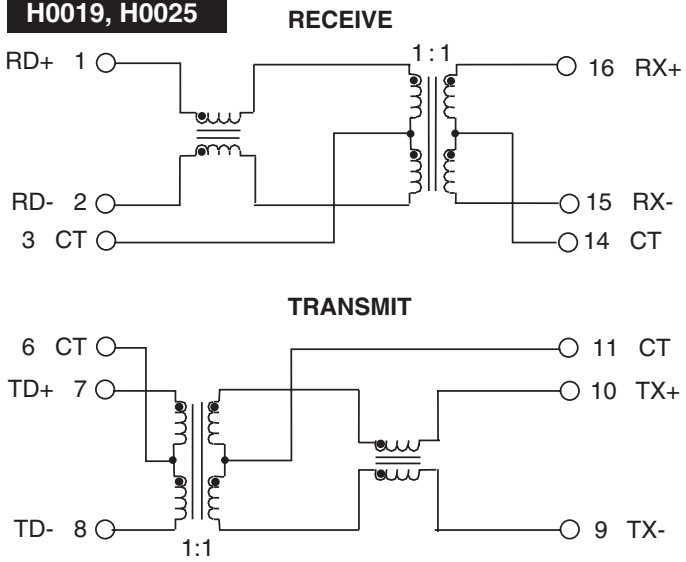

H0020

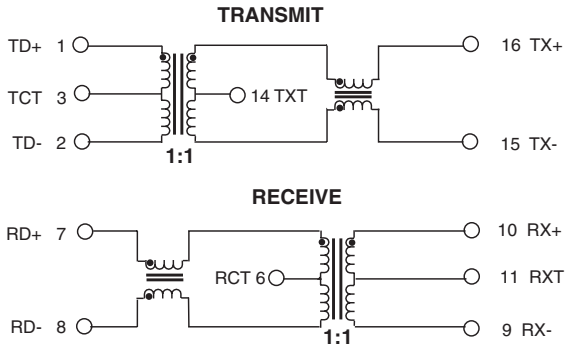

H0022

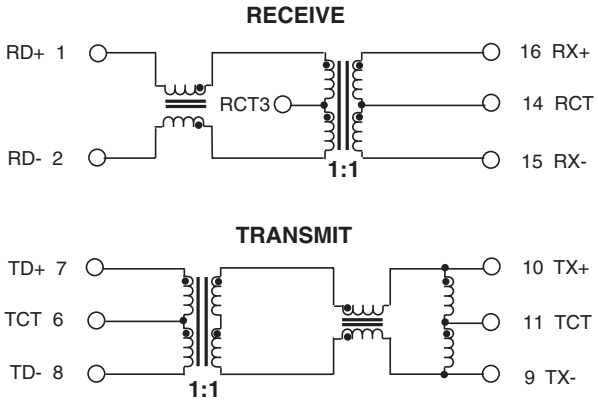

Application Circuits

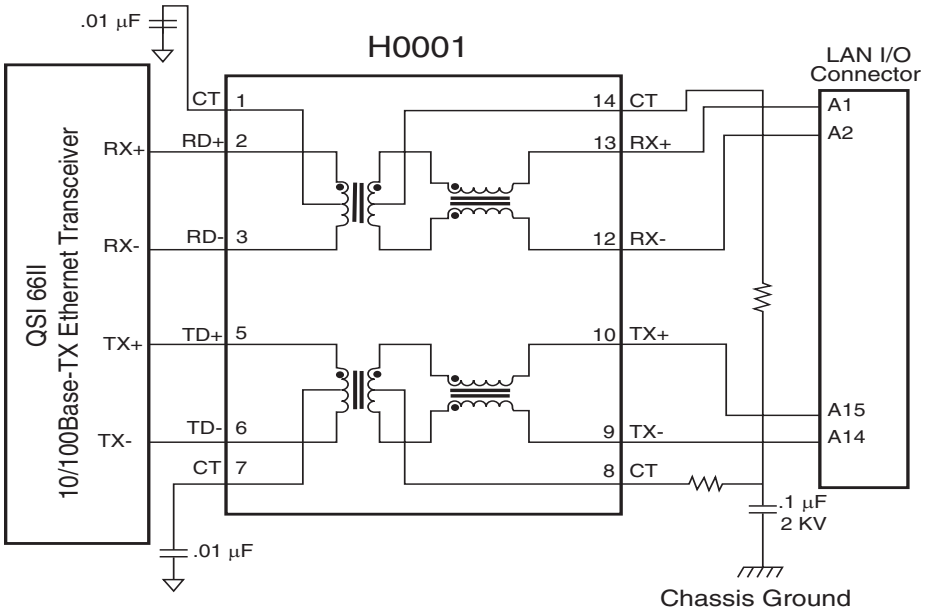

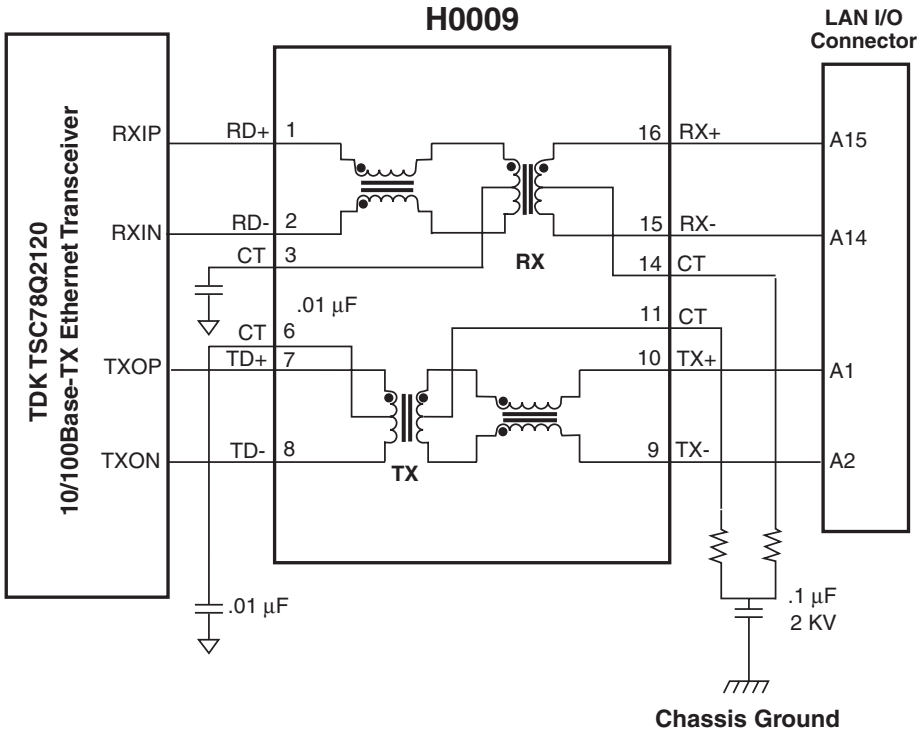

For More Information:

Pulse Worldwide Headquarters
12220 World Trade Dr.
San Diego, CA 92128
U.S.A.
www.pulseeng.com
TEL: 858 674 8100
FAX: 858 674 8262

Pulse European Headquarters
Einsteinstrasse 1
71083 Herrenberg
Germany
TEL: 49 7032 7806 0
FAX: 49 7032 7806 12

Pulse China Headquarters
No. 1
Industrial District
Changan, Dongguan
China
TEL: 86 769 85538070
FAX: 86 769 85538870

Pulse North China
Room 1503
XinYin Building
No. 888 YiShan Rd.
Shanghai 200233
China
TEL: 86 21 54643211/2
FAX: 86 21 54643210

Pulse South Asia
150 Kampong Ampat
#07-01/02
KA Centre
Singapore 368324
TEL: 65 6287 8998
FAX: 65 6280 0080

Pulse North Asia
No. 26
Kao Ching Rd.
Yang Mei Chen
Taoyuan Hsien
Taiwan, R. O. C.
TEL: 886 3 4641811
FAX: 886 3 4641911

Performance warranty of products offered on this data sheet is limited to the parameters specified. Data is subject to change without notice. Other brand and product names mentioned herein may be trademarks or registered trademarks of their respective owners.
© Copyright, 2006. Pulse Engineering, Inc. All rights reserved.